KAAN HAVACILIK SANAYİ VE TİC. A.Ş.

El Kitabı : OPERATIONS MANUAL PART B(LEONARDO AW109)
Revizyon No : 8
Revizyon Tarihi : 04.07.2026

SİVİL HAVACILIK GENEL MÜDÜRLÜĞÜ

DIRECTORATE GENERAL OF CIVIL AVIATION

ONAY SERTİFİKASI
APPROVAL CERTIFICATE

OPERATIONS MANUAL PART B

KAAN HAVACILIK SANAYİ VE TİC. A.Ş.

KAAN HAVACILIK

Revision Date : 04.07.2026 Revision No : 8

TYPE(S) OF AIRCRAFT
Leonardo / AW109
This Operations Manual (Part B / Aircraft Operating Matters - Type Related) has been evaluated and inspected in accordance with SHT-OPS Instructions and approved by the Turkish DGCA.

Approved By:

Turgay SENGER
Flight Standards Coordinator

Approval Date

18/08/2026

T.C. ULAŞTIRMA VE ALTYAPI BAKANLIĞI

Not:5070 sayılı elektronik imza kanunu gereği bu belge elektronik imza ile imzalanmıştır.

LIST OF EFFECTIVE PAGES

Section	Revision Number	Revision Date
00.01.01	8	04.07.2026
00.01.02	3	18.09.2018
00.01.03	3	18.09.2018
00.01.04	3	18.09.2018
00.02.01	5	20.02.2024
00.02.02	8	04.07.2026
00.02.03	3	18.09.2018
00.02.04	3	18.09.2018
00.02.05	3	18.09.2018
00.02.06	5	20.02.2024
00.02.07	5	20.02.2024
01.00	8	04.07.2026
01.01	3	18.09.2018
01.01.01	3	18.09.2018
01.01.02	3	18.09.2018
01.01.03	8	04.07.2026
01.01.04	3	18.09.2018
01.01.05	3	18.09.2018
01.01.06	8	04.07.2026
01.01.07	3	18.09.2018
01.01.08	3	18.09.2018
01.01.09	8	04.07.2026
01.01.10	3	18.09.2018
01.01.10.01	8	04.07.2026
01.01.10.02	3	18.09.2018
01.01.10.03	3	18.09.2018
01.01.10.04	5	20.02.2024
01.01.10.05	3	18.09.2018
01.01.10.06	3	18.09.2018
01.01.10.09	3	18.09.2018
01.01.10.10	3	18.09.2018
01.01.10.12	3	18.09.2018
02.01	3	18.09.2018
02.01.01	3	18.09.2018
02.01.02	3	18.09.2018

02.01.03	3	18.09.2018
02.01.04	3	18.09.2018
02.01.05	3	18.09.2018
02.01.06	6	08.11.2024
02.01.07	6	08.11.2024
02.01.08	3	18.09.2018
02.01.09	6	08.11.2024
02.02	3	18.09.2018
03.01	3	18.09.2018
03.01.01	3	18.09.2018
03.01.02	5	20.02.2024
03.01.03	3	18.09.2018
03.01.04	3	18.09.2018
03.01.05	5	20.02.2024
03.01.06	3	18.09.2018
03.01.07	3	18.09.2018
03.01.08	3	18.09.2018
03.01.09	3	18.09.2018
03.01.10	3	18.09.2018
03.01.11	3	18.09.2018
03.01.12	3	18.09.2018
04.00	3	18.09.2018
04.01	6	08.11.2024
04.02	6	08.11.2024
04.03	6	08.11.2024
05.01	3	18.09.2018
05.02	6	08.11.2024
05.03	6	08.11.2024
05.04	3	18.09.2018
05.05	3	18.09.2018
05.06	3	18.09.2018
05.07	6	08.11.2024
05.08	5	20.02.2024
06.01	3	18.09.2018
06.02	6	08.11.2024
06.03	3	18.09.2018

06.04	3	18.09.2018
06.05	3	18.09.2018
06.06	3	18.09.2018
06.07	3	18.09.2018
06.08	3	18.09.2018
06.09.00	7	23.07.2025
06.09.01	8	04.07.2026
06.09.02	3	18.09.2018
06.09.03	3	18.09.2018
06.09.04	8	04.07.2026
06.09.05	8	04.07.2026
07.01	3	18.09.2018
08.01	3	18.09.2018
08.02	3	18.09.2018
09.01	3	18.09.2018
10.01	3	18.09.2018
10.02	3	18.09.2018
10.03	3	18.09.2018
10.04	3	18.09.2018
10.05	3	18.09.2018
10.06	3	18.09.2018
10.07	3	18.09.2018
10.08	3	18.09.2018
11.01	3	18.09.2018
11.02	3	18.09.2018

REVISION HIGHLIGHTS

Revision No:3

Existing OM-B-AW109 transferred to electronic portal

Revision No:4

00.02.01 Person(s) Responsible for the issuance and insertion of amendments and revisions, 00.02.02 Amendments and Revisions with insertion dates and effective dates, 00.02.06 Temporary Revisions, 00.02.07 Distribution System for the manuals, amendments and revisions, 06.09.04 Dry Operating Mass and corresponding centre of gravity (CG) or index, 06.09.05 Sample Mass and Balance Sheet

Revision No:5

00.01.01 A statement that the manual complies with all applicable regulations and with the terms and conditions of the applicable air operator certificate (AOC), 00.02.01 Person(s) Responsible for the issuance and insertion of amendments and revisions, 00.02.02 Amendments and Revisions with insertion dates and effective dates, 00.02.06 Temporary Revisions, 00.02.07 Distribution System for the manuals, amendments and revisions, 01.01.10.04 Fuel System, 03.01.02 Fire and Smoke Drills, 03.01.05 Engine Failure, 05.07 Selection of Aerodromes and Operating Sites, 05.08 Fuel/Energy Scheme Fuel/Energy Planning and In-flight Re-planning Policy, 06.09.04 Dry Operating Mass and corresponding centre of gravity (CG) or index, 06.09.05 Sample Mass and Balance Sheet

Revision No:6

Revisions related to RFM-AW109SP-Rev-28:

-

00.01.01 A statement that the manual complies with all applicable regulations and with the terms and conditions of the applicable air operator certificate (AOC), 00.02.02 Amendments and Revisions with insertion dates and effective dates, 01.01.03 Types of Operation, 01.01.09 Performance Limitations, 02.01.06 In-flight and Descent, 02.01.07 Approach, Landing preparation and Briefing, 02.01.09 Shutdown, Post-flight Check, 04.01 Performance Class 1 Helicopter, 04.02 Performance Class 2 Helicopter, 04.03 Performance Class 3 Helicopter, 05.02 Data and Instructions Necessary for Pre-flight, 05.03 Air Traffic Services (ATS) Flight Plan, 05.07 Selection of Aerodromes and Operating Sites, 06.02 Principles and Methods involved in the Loading and in the Mass and Balance system

Revision No:7

00.01.01 A statement that the manual complies with all applicable regulations and with the terms and conditions of the applicable air operator certificate (AOC), 00.02.02 Amendments and Revisions with insertion dates and effective dates, 06.09.00 WEIGHING of the AIRCRAFT (new procedure).

Revision No:8

A109S Trekker variant (TC-HKH) entering to fleet;

00.01.01 A statement that the manual complies with all applicable regulations and with the terms and conditions of the applicable air operator certificate (AOC), 00.02.02 Amendments and Revisions with insertion dates and effective dates, 01.00 General Information (e.g. aircraft dimensions), including a description of the units of measurement used for the operation of the aircraft type concerned and Conversion Tables, 01.01.03 Types of Operation, 01.01.06 Speed Limitations, 01.01.09 Performance Limitations, 01.01.10.01 Power Plant, 06.09.01 Calculation System (e.g. index system), 06.09.04 Dry Operating Mass and corresponding Centre of Gravity (CG) or Index, 06.09.05 Sample Mass and Balance Sheet

TABLE OF CONTENTS

00.01-Introduction

00.01.01-A statement that the manual complies with all applicable regulations and with the terms and conditions of the applicable air operator certificate (AOC).

00.01.02-A statement that the manual contains operational instructions that are to be complied with by the relevant personnel.

00.01.03-A list and brief description of the various parts, their contents, applicability and use.

00.01.04-Explanations and definitions of terms and words needed for the use of the manual.

00.02-System of amendment and revision

00.02.01-Person(s) Responsible for the issuance and insertion of amendments and revisions

00.02.02-Amendments and Revisions with insertion dates and effective dates

00.02.03-Handwritten amendments and revisions are not permitted, except in situations requiring immediate amendment or revision in the interest of safety

00.02.04-System for the Annotation of Pages or paragraphs and their effective dates

00.02.05-Annotation of Changes (in the text and, as far as practicable, on charts and diagrams)

00.02.06-Temporary Revisions

00.02.07-Distribution System for the manuals, amendments and revisions

00-ADMINISTRATION AND CONTROL OF OPERATIONS MANUAL

ORO.MLR.100 / AMC2 ORO.MLR.100 / AMC3 ORO.MLR.100 / AMC4 ORO.MLR.100 / AMC1 ORO.MLR.100 / GM1 ORO.MLR.100(h) / ORO.MLR.101

00.01-Introduction

ORO.MLR.100

(00.01.01)- A statement that the manual complies with all applicable regulations and with the terms and conditions of the applicable air operator certificate (AOC).

Revizyon No: 8 Revizyon Tarihi: 04.07.2026

ORO.MLR.100

KAAN AIR's

- **Leonardo AW109** Operations Manual Part B (OM PART B) document **Rev-8** dated **04/07/2026 ,**
- EASA AIR OPS Regulation **Rev-24** ,
- **AW109 SP** Rotorcraft Flight Manual (RFM) **Rev-30** published by Leonardo S.p.A. dated **11.11.2025 ,**
- **A109S Trekker** Rotorcraft Flight Manual (RFM) **Iss-2, Rev-1** published by Leonardo S.p.A. dated **11.11.2025 ;**

are in compliance with the requirements.

This OM PART B takes into account the operational conditions of the above mentioned aircraft types/classes/variants in the operating fleet of KAAN AIR within the scope of the requirements determined by the Turkish DGCA.

Prepared By	Controlled By	Approved By
Ali Metin UZUN Flight Ops. Manager, Captain KAAN Hvcl. San. Tic. A.Ş.	Guray UNLU Comp. Monit. & Safety Manager KAAN HVCL. San. ve Tic. A.Ş.	Kadir ERDOGAN Accountable Manager, Capt. KAAN HVCL. San. ve Tic. A.Ş.

(00.01.02)- A statement that the manual contains operational instructions that are to be complied with by the relevant personnel.

Revizyon No: 3 Revizyon Tarihi: 18.09.2018

ORO.MLR.100

Operations Manual contains information and instructions to enable operational personnel to perform their duties in best standards. KAAN AIR will make available this manual's procedures to operational personnel. The amendment of this manual and its procedures shall be properly controlled.

KAAN AIR will not introduce any alternative procedures to those prescribed in this manual unless needed and equivalent safety case has first been approved by Turkish DGCA.

It is accepted that these procedures do not override the necessity of complying with any new or amended regulation published by Turkish DGCA from time to time here these new or amended regulations are in conflict with these procedures.

The Turkish DGCA has been provided with a copy of the Operations Manual, and receives all amendments and revisions thereto.

The rules and regulations contained in the Operations Manual will be adhered to by the **relevant personnel** at all times; in the event of wilful or negligent disobedience to those rules and regulations the personnel concerned may become subject to disciplinary, legal or penal action. However, nothing contained in the Operations Manual will keep personnel from exercising their own best judgment during any irregularity for which the Operations Manual gives no provisions or in emergencies.

The **pilot-in-command** will, in an emergency situation that requires immediate decision and action, take any action he considers necessary under the circumstances. In such cases he may deviate from rules, operational procedures and methods in the interest of safety.

All **flight crewmembers** will have written copy of the Operations Manual in every aircraft . All **other operations personnel** will have easy access to the parts relevant to their respective duties. All**operating staff** is required to adhere to instructions laid down in this manual and any deviations should be reported, the reasons for such deviation being given.

Should any individual consider that all or any part of a procedure or instruction requires to be amended, he should notify the **Flight Operations Manager**.

(00.01.03)- A list and brief description of the various parts, their contents, applicability and use.

Revizyon No: 3 Revizyon Tarihi: 18.09.2018

ORO.MLR.100

The Operations Manual consists of four separate parts respectively volumes:

Part A General/Basic
Part B Helicopter Operating Matters
Part C Route and Aerodrome Instructions and Information
Part D Training Manual

Part-A contains the non-type related operational policies, instructions and procedures required for a safe operation. It details the duties and responsibilities of all ground and flight operations personnel and their interrelationship to the operation as a whole.

Part-B contains all type related instructions and procedures required for a safe operation. It takes account of the different types of helicopter variants used in the KAAN AIR. It comprises the manufacturer's helicopter documentation. It contains relevant checklists, and a description and instructions for the use of emergency equipment and instructions relating to the action to be taken in emergencies.

Part-C comprises the Route and Aerodrome Instructions and Information required for the area of operation. Subparts of the Part-C are the current maps and charts and associated documents covering the intended flight inclusive of any diversion which may reasonably be expected and containing essential information relating to the Search and Rescue

Services in the area over which the helicopter will be flown.

Part-D comprises Training and contains all training instructions for personnel required for a safe operation.

(00.01.04)- Explanations and definitions of terms and words needed for the use of the manual.

Revizyon No: 3 Revizyon Tarihi: 18.09.2018

ORO.MLR.100

Refer to OM Part A 00.01.04.

00.02-System of amendment and revision

ORO.MLR.100

(00.02.01)- Person(s) Responsible for the issuance and insertion of amendments and revisions

Revizyon No: 5 Revizyon Tarihi: 20.02.2024

ORO.MLR.100

The Operational Manual Part B**,** its amendments and revisions are published and issued by the **Flight Operations Manager** and **Compliance Monitoring Manager**.

The Flight Operations Manager is responsible for its contents, and for keeping the instructions and information up-to-date of chapters. Both managers will supply the Turkish DGCA with intended amendments and revisions in advance of the effective date.

The operations manual will be published in accordance with **easy usage** and **human factors** principles. The manual will be easy reading and understanding language by operations personnel.

All KAAN AIR employees have easy access to this OM Part via website written in chapter 00.02.07 using their personal user names and passwords. The electronic version of part in the system contains whole up to date manual in PDF file format and may be used as a master document. Individually produced printouts from any electronic version of the part is for information only.

The binders and pages will be good handling and well reading on board of helicopters. In additions, the electronic copy will be colored and easy reading by users.

Note: *When an amendment concerns any provision or procedure, which must be approved by the Turkish DGCA, such approval will have been obtained before the amendment becomes effective. Only when immediate amendments or revisions are required in the interest of safety, they may be published and applied immediately provided that any approval required has been applied for.*

All holders of the part will revise the manual at the time specified in the amendment’s introduction, and record, on the Record of Revision, the insertion date, the effective date, and their name.

With each normal amendment an updated "List of Effective Pages" will be issued, which will enable the user to check whether his manual is up-to-date.

In order to identify changes, additions and deletions, a vertical line shall be used to outline revised or newly published paragraphs on the pages. In addition, an introduction ("Revision Letter") will be provided, identifying the revised pages and briefly describing the reason for their revision. Personnel are required to carefully take note of the change.

The page(s) affected will be entered in the "Temporary Revision Record". Temporary revisions will be brought to the attention of the Turkish DGCA immediately and, unless limited to a defined period of time, be followed by a normal amendment as soon as practicable.

(00.02.02)- Amendments and Revisions with insertion dates and effective dates

Revizyon No: 8 Revizyon Tarihi: 04.07.2026

ORO.MLR.100

Rev. No.	Date	Reason for Revision	Inserted By
Original	20.04.2011	Initial	Ertuğrul PEKER
1	11.10.2012	A119 Added	Ertuğrul PEKER
2	01.07.2013	AW139 Added	Metin YILDIZ
3	02.04.2014	Compliance of EC 965/2012	Kadir ERDOĞAN
3 Elect	18.09.2018	OM-B-AW109 transferred to electronic portal	Kadir ERDOĞAN
4	25.03.2021	Refer to Highlight Section	Kadir ERDOĞAN
5	20.02.2024	" "	Cemil PEKDEMİR
6	08.11.2024	" "	Ali Metin UZUN
7	23.07.2025	" "	Ali Metin UZUN
8	04.07.2026	" " (+ TC-HKH / A109S Trekker, entering to fleet)	Ali Metin UZUN

(00.02.03)- Handwritten amendments and revisions are not permitted, except in situations requiring immediate amendment or revision in the interest of safety

Revizyon No: 3 Revizyon Tarihi: 18.09.2018

ORO.MLR.100

Handwritten amendments are permissible only in situations requiring immediate revision in the interest of safety; they will be initiated and put into force by a circular of the **Flight Operations Manager**. They will be followed by a formal amendment as soon as practicable and the Turkish DGCA will be informed immediately.

(00.02.04)- System for the Annotation of Pages or paragraphs and their effective dates

Revizyon No: 3 Revizyon Tarihi: 18.09.2018

ORO.MLR.100

Permanent changes or revisions will be noted in the Record of Revisions along with the insertion date and the effective date. The List of Effective Pages will be updated and each revised page will be accompanied by a new "Effective Date" located at the top of each page of the Operations Manual.

All text revisions will be noted by a **single black line at the left/right side (I)** of the text and red colored that has been changed or added. The revision border will be removed when the section is revised again. Only the most current revision will have the text border.

Any text that has been deleted will be referenced in the Revisions Section of this Operations Manual along with a brief explanation of the text that was removed and why.

Each holder of Operations Manual, or appropriate parts of it, shall keep it up to date with the amendments or revisions supplied by the KAAN AIR.

KAAN AIR will supply the TR DGCA with intended amendments and revisions in advance of the effective date. When the amendment concerns any part of the Operations Manual which must be approved in accordance with the regulations, this approval will be obtained before the amendment becomes effective.

KAAN AIR will incorporate all amendments and revisions required by the regulations and the TR DGCA.

(00.02.05)- Annotation of Changes (in the text and, as far as practicable, on charts and diagrams)

Revizyon No: 3 Revizyon Tarihi: 18.09.2018

ORO.MLR.100

All revisions or changes to diagram or charts will be identified by a revision bar to the right of the diagram or chart. The changes or revisions to the diagrams or charts will be noted in the Record of Revisions along with the insertion date and the effective date. The List of Effective Pages will be updated and each revised page will be accompanied by a new "Effective Date" located at the top of each page of the Operations Manual.

(00.02.06)- Temporary Revisions

Revizyon No: 5 Revizyon Tarihi: 20.02.2024

ORO.MLR.100

Temp. Rev. No.	Date	Reason for Revision	Inserted By
3.01	01.03.2020	06.09.04 Dry Operating Mass and corresponding centre of gravity (CG) or index 06.09.05 Sample Mass and Balance Sheet	Kadir ERDOĞAN

(00.02.07)- Distribution System for the manuals, amendments and revisions

Revizyon No: 5 Revizyon Tarihi: 20.02.2024

ORO.MLR.100

Copy No	Distribution	Format
Original	Flight Operations Manager	Paper Copy
1	Turkish DGCA	PDF
2	Accountable Manager	PDF
3	Compliance Monitoring and Safety Manager	PDF
4	Training Manager	PDF
5	Ground Operations & Security Manager	PDF
6	Continuing Airworthiness / Technical Manager	PDF
7	Every Helicopters in the fleet (AW109)	Paper Copy

The operations manual shall be distributed to all pilots, operations personnel when it issued and/or revised after approval to access the operations manuals **within 5 days after approval**. All personnel can access to operations manual PDF copies at KAAN AIR's https://kaanair-depo.online/MANUALS/OPERATIONS/ website.

Flight Operations Manager and/or Compliance Monitoring Manager is responsible of distribution and **revision info; immediately after approval** to all operations personel via https://ftl.safejets.net/ website which is notification portal has all the related operations personnel's email addresses recorded. Website will send a notification email which also has a quick link to access to attached document(s). Website also will log in a Notification Sheet/List for the personnel's access (by the way; been informed) date and time record for the further auditing purposes and as a legal proof.

All operations personnel can make a request copy of approved Operations Manual from Flight Operations Manager or Compliance Monitoring Manager when operation personnel outside of main base.

All operations manual shall be distributed with TR DGCA Approval Certificate in the 2nd page after cover. All personnel shall look at the latest approval certificate before using operations manual.

TABLE OF CONTENTS

01.00-General Information (e.g. aircraft dimensions), including a description of the units of measurement used for the operation of the aircraft type concerned and Conversion Tables

01.01-Certified Limitations and Applicable Operational Limitations

01.01.01-Certification Status (e.g. EASA (supplemental) type certificate, environmental certification, etc.)

01.01.02-Passenger Seating Configuration for each aircraft type including a Pictorial Presentation

01.01.03-Types of Operation

01.01.04-Crew Composition

01.01.05-Mass and Centre of Gravity (CG)

01.01.06-Speed Limitations

01.01.07-Flight Envelope(s)

01.01.08-Wind Limits

01.01.09-Performance Limitations

01.01.10-System Limitations

01.01.10.01-Power Plant

01.01.10.02-Transmissions

01.01.10.03-Rotor Speed

01.01.10.04-Fuel System

01.01.10.05-Lubricant

01.01.10.06-Hydraulics System

01.01.10.07-Wheel Brake

01.01.10.08-Pitot Heating

01.01.10.09-Electrical System

01.01.10.10-AFCS - Automatic Flight Control System

01.01.10.11-Avionic

01.01.10.12-Miscellaneous

01-LIMITATIONS

AMC3 ORO.MLR.100

(01.00)- General Information (e.g. aircraft dimensions), including a description of the units of measurement used for the operation of the aircraft type concerned and Conversion Tables

Revizyon No: 8 Revizyon Tarihi: 04.07.2026

AMC3 ORO.MLR.100

01.00.01 General Information and Units of Measurement

The presented Operations Manual Part B (helicopter related operations documents) is a part of the Flight Operations Manual of KAAN AIR.

All of the dimensions, performance data and other calculation documents published in this document are taken from the respective current version of RFM LEONARDO AW109. The calculations must be made together with the original data from this document.

01.00.02 Helicopter Type

This part of the handbook is intended for the deployed helicopter:

- AW-109 main type including variants AW109SP and A109S Trekker.

01.00.03 Helicopter Measurement

Calculations must be exclusively made using the measurements as given in the current Rotorcraft Flight Manual.

01.00.04 Dimensions

A) Figure 7-1 The AW109SP Helicopter

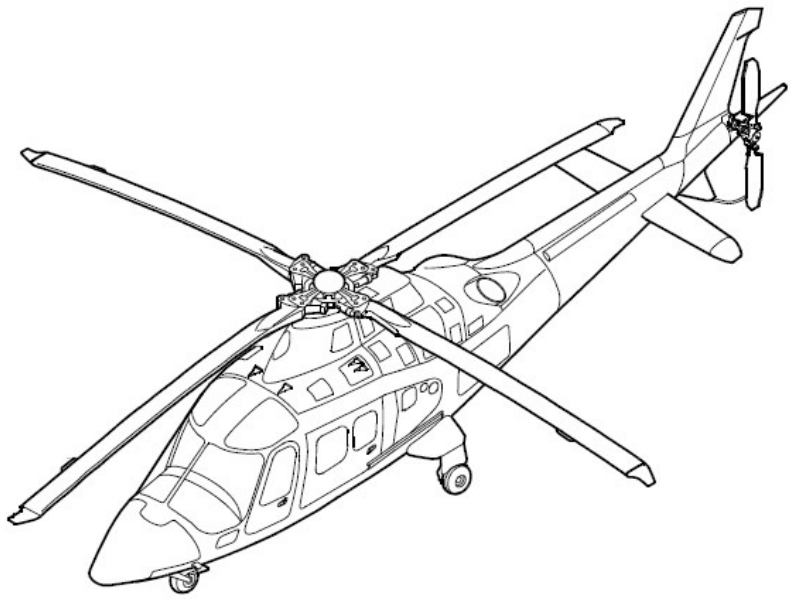

B) Figure 7-2 Helicopter Dimensions for AW109SP

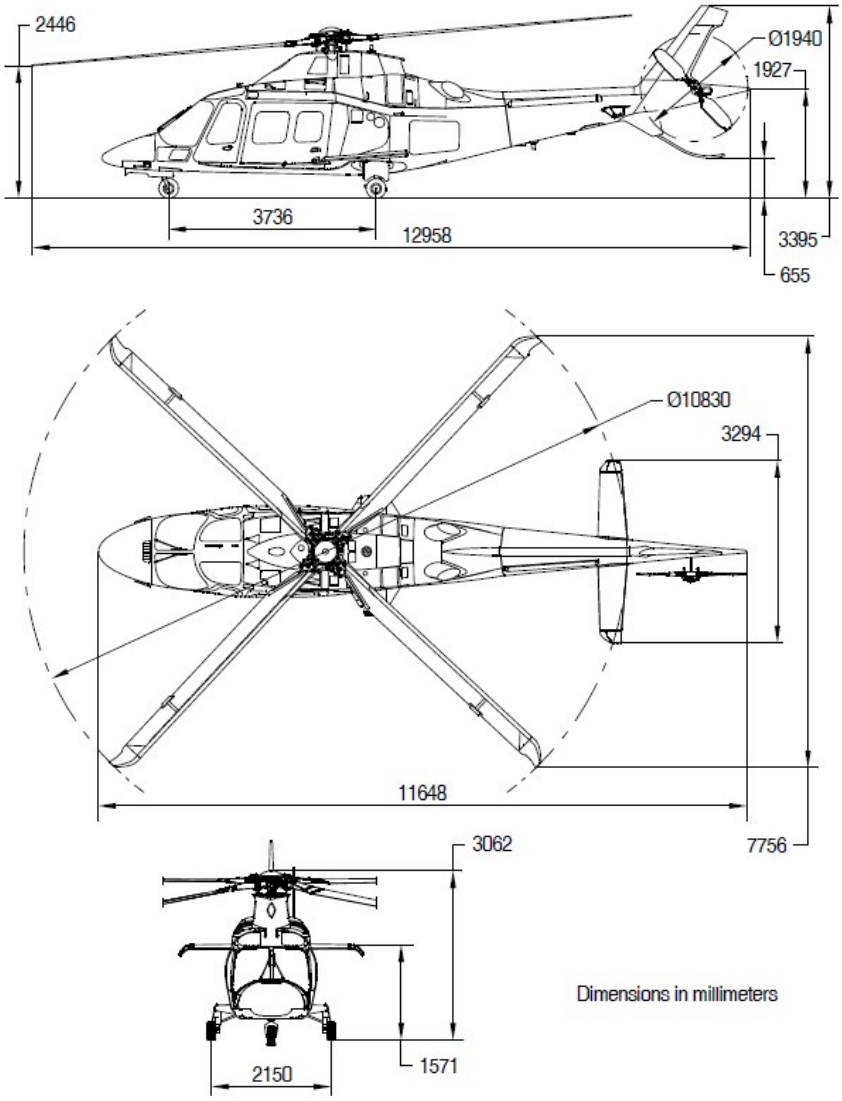

C) Figure 7-1 A109S Helicopter with Trekker kit

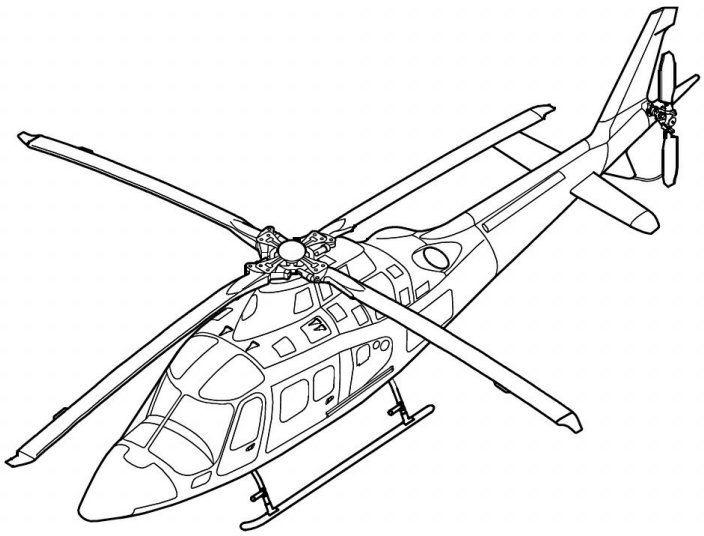

D) Figure I-1 Helicopter - Three Views A109S Trekker

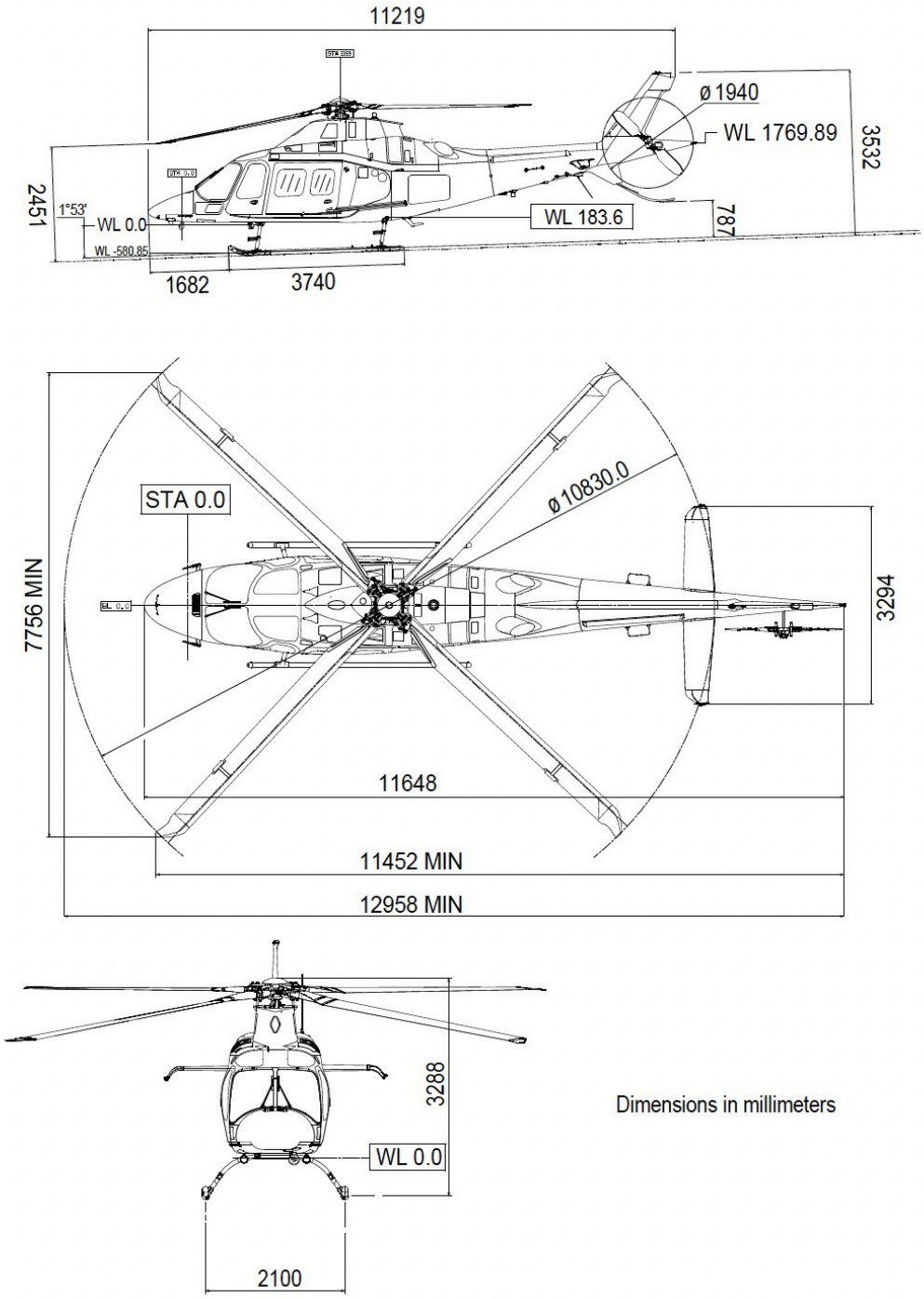

01.00.05 Measurement Units

The following measurement units are to be used:

- Length: Metric
- Temperature: Degrees Celsius
- Speed: Knots
- Climb & sink rate: Feet per minute
- Mass: Kilogram
- Liquid measurements: Litres, kilograms
- Air pressure: Hectopascal
- Working pressure: Bar

01.01-Certified Limitations and Applicable Operational Limitations

Revizyon No: 3 Revizyon Tarihi: 18.09.2018
AMC3 ORO.MLR.100

GENERAL
Compliance with RFM Section 1 of this manual is mandatory.

The helicopter must also be operated in accordance with the appropriate operating rules.

(01.01.01)- Certification Status (e.g. EASA (supplemental) type certificate, environmental certification, etc.)

Revizyon No: 3 Revizyon Tarihi: 18.09.2018
AMC3 ORO.MLR.100

The helicopter is certified by the European Aviation Safety Agency (EASA) in accordance with CS / FAR 27 for **Small Rotorcraft** as detailed in the Type Certificate Data Sheet EASA R.005.

(01.01.02)- Passenger Seating Configuration for each aircraft type including a Pictorial Presentation

Revizyon No: 3 Revizyon Tarihi: 18.09.2018
AMC3 ORO.MLR.100

NUMBER OF SEATS
Eight, including the pilot's seat.

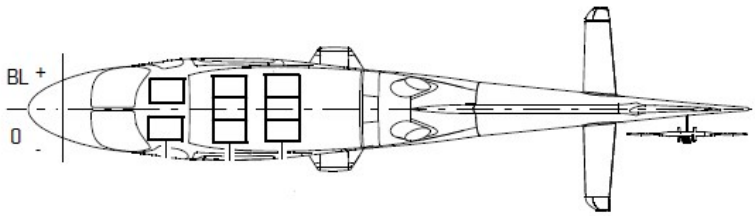

(01.01.03)- Types of Operation

Revizyon No: 8 Revizyon Tarihi: 04.07.2026
AMC3 ORO.MLR.100

The rotorcraft is eligible for the following kinds of operation when the appropriate instruments and equipment required by the airworthiness and/or operating rules are installed and approved and are operable in condition:

— **Day and Night VFR**;

— **IFR** (Supplement 18 for A109S Trekker);

— **Category A operations** (Supplement 4);

— External Load Operations (Supplement 5, 6 for both variants, and Supplement 7 for only AW109SP);

— Night Vision Imaging System (NVIS) Operations (Supplement 20 for A109S Trekker and Supplement 40 for AW109SP).

Aerobatic manoeuvres are prohibited.

TYPE OF OPERATION - CAT A
according to Supplement 04 Cat A Operations
- CAT A operations are approved under Day/Night VFR, and Day/Night IFR.
- CAT A Take-Off and Landing must be carried out in VMC.

- IFR flight may be initiated at the end of PATH 1 (minimum height 200 ft ATS) or at a height where the airspeed is greater than VMINI (55 KIAS).
- IFR flight must end not below 200 ft ALS or at a height where the airspeed is not below VMINI (55 KIAS).

CATEGORY A TAKE-OFF

Weather conditions must be such that acceleration to TDP and further acceleration to VTOSS can be accomplished with external visual reference within the FATO area.

CATEGORY A LANDING

Weather conditions must be such that LDP can be achieved with external visual reference within the FATO area.

TYPE OF OPERATION - Digital Map Generator according to Supplement 20 (AW109SP) DMG
The Digital Map must not be used for navigation.

CAUTION
The DMG display is intended to serve as an awareness tool only. The display and database may not provide the accuracy and fidelity on which to base routine navigation decisions and plan routes.

TYPE OF OPERATION - Traffic Advisory System according to Supplement 21 TAS
The TAS 620 is approved for VFR and IFR operation as an aid to visually acquiring traffic.

TYPE OF OPERATION - Enhanced Video System according to Supplement 27 EVS
The EVS-1000/1500/2300 IR sensor image must not be used for takeoff, landing or navigation.

CAUTION
The EVS-1000/1500/2300 is intended to serve as an obstacle awareness tool only. The display may not provide the accuracy and fidelity on which to base take-off, landing and navigation decisions.

(01.01.04)- Crew Composition

Revizyon No: 3 Revizyon Tarihi: 18.09.2018
AMC3 ORO.MLR.100

MINIMUM FLIGHT CREW

The minimum flight crew consists of **1 (one) pilot** who shall operate the helicopter from the **right crew seat** according to TR DGCA directive of UOD-2014/17 and because of MTOW is NOT more than 3175 kg.

The left crew seat may be used for an additional pilot when the approved dual controls are installed.

(01.01.05)- Mass and Centre of Gravity (CG)

Revizyon No: 3 Revizyon Tarihi: 18.09.2018
AMC3 ORO.MLR.100

WEIGHT AND CENTER OF GRAVITY LIMITATIONS WEIGHT
Maximum gross weight for
ground taxing and towing ..... 3175 kg (7000 lb)
Maximum gross weight for take-off and landing..... 3175 kg (7000 lb)
Minimum gross weight for flight..... 2050 kg (4519 lb)

CENTER OF GRAVITY
Longitudinal limits..... See Figure 1-1
Lateral limits ..... See Figure 1-1

PASSENGERS CABIN LIMITATIONS
Baggage storage under the seat is prohibited.

BAGGAGE COMPARTMENT LIMITATIONS
Maximum load..... 120 kg (264 lb)
Maximum Unit Load 500 kg/m2 (102 lbs/ft2)

Note
Refer to Section 6, **Weight and Balance**, for load distribution.

HEADWIND GROSS WEIGHT BENEFIT - CAT A
according to Supplement 04 Cat A Operations
The Gross Weight Benefit, for Headwind Component, incorporated into the WAT Charts, (except for Clear Area in Part A) presented in the supplement, has already been factored by 50%. No further weight correction is necessary.

Figure 1-1 Weight , Longitudinal and Lateral CG Envelope

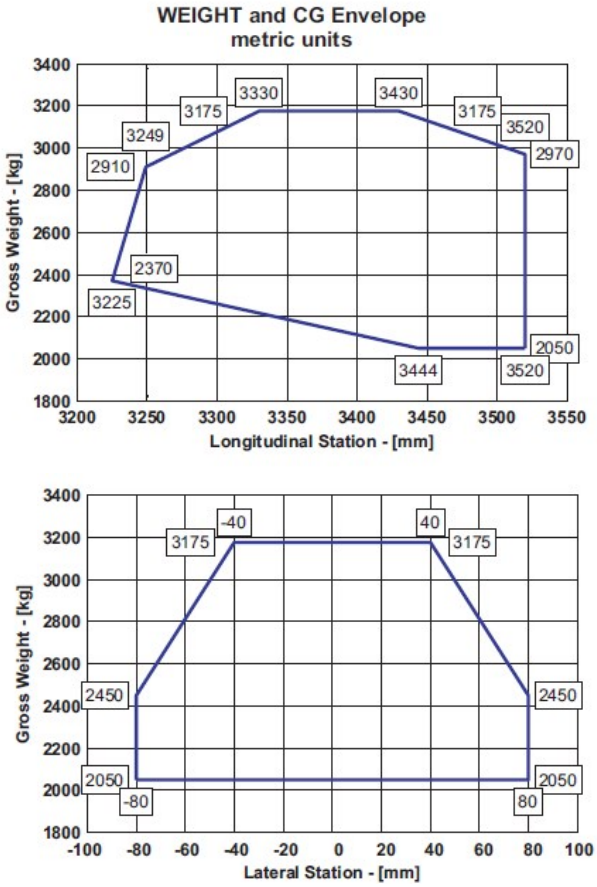

(01.01.06)- Speed Limitations

Revizyon No: 8 Revizyon Tarihi: 04.07.2026
AMC3 ORO.MLR.100 / CAT.OP.MPA.140

AIRSPEED LIMITATIONS
VNE (OEI/Power-OFF): ..... VNE (Power-ON) - 40 KIAS
VNEI (maximum IFR airspeed) ..... VNE (Power-ON) - 20 KIAS
Vmini (minimum IFR airspeed) ..... 55 KIAS
Maximum airspeed during IFR/VFR approaches..... 140 KIAS
Maximum landing gear operating airspeed (VLO) ..... 140 KIAS
Maximum landing gear extended airspeed (VLE)..... 140 KIAS
Minimum airspeed in autorotation (without
close external references)..... 60 KIAS
Maximum airspeed with single AP operational:
— normal flight ..... VNE (Power-ON) - 40 KIAS
— in IFR/VFR approaches ..... 115 KIAS

— in moderate to high turbulence ..... 115 KIAS
Maximum airspeed with AFCS OFF: ..... VNE (Power-ON) - 40 KIAS

Maximum speed for searchlight extension..... 135 KIAS

Maximum speed for searchlight extended, for orientation

and retraction ..... 150 KIAS

GROUND SPEED LIMITATIONS ON CONCRETE OR EVEN SURFACES
Maximum speed for running take-off and landing .....40 knots
Maximum taxiing speed (nose wheel unlocked):
— straight .....20 knots
— turning.....10 knots

ON UNPREPARED OR UNEVEN SURFACES
Maximum speed for running take-off and landing .....20 knots
Maximum taxiing speed (nose wheel unlocked):
— straight .....20 knots
— turning.....10 knots

DOORS OPENED OR REMOVED
(AW109SP)
Flight with either one or both passengers cabin sliding doors open is prohibited if passenger door modification P/N 109-0814-35 is not installed.

It is possible to fly with pilot / copilot doors removed and/or passengers cabin sliding doors opened to lock position or removed in whichever combination.
VNE with any door removed or open to lock position.....75 KIAS
Maximum airspeed for passengers cabin sliding doors
opening or closing .....50 KIAS
IFR operation is prohibited with any door opened or removed.

(A109S Trekker)
Flight with either one or both passenger cabin sliding doors opened is prohibited if passenger door modification P/N 109-0814-35 is not installed.

Flight with one or both passenger cabin sliding doors opened is allowed only with the doors opened and locked.

Maximum airspeed for:

— Cockpit doors removed (both) and cabin doors closed ..... 100 KIAS

— Cockpit doors removed (both) and cabin doors open..... 75 KIAS

— Cockpit doors removed (both) and cabin doors removed..... 100 KIAS

— Cabin sliding doors opening/closing (one or both) ..... 50 KIAS

— Cabin sliding doors open and locked (one or both) ..... 75 KIAS

— Cabin sliding doors removed (one or both) ..... 100 KIAS

Opening/closing door(s) in flight must be carried out by a person trained for this task.

(01.01.07)- Flight Envelope(s)

Revizyon No: 3 Revizyon Tarihi: 18.09.2018
AMC3 ORO.MLR.100

ALTITUDE LIMITATIONS
Maximum altitude for take-off and landing .....see Figure 1-4
Minimum and maximum operating altitudes.....see Figure 1-4

Note

For low speed controllability, IGE and OGE hover performance and H-V refer to Section 4.

Figure 1-4 Pressure altitude / OAT Envelope

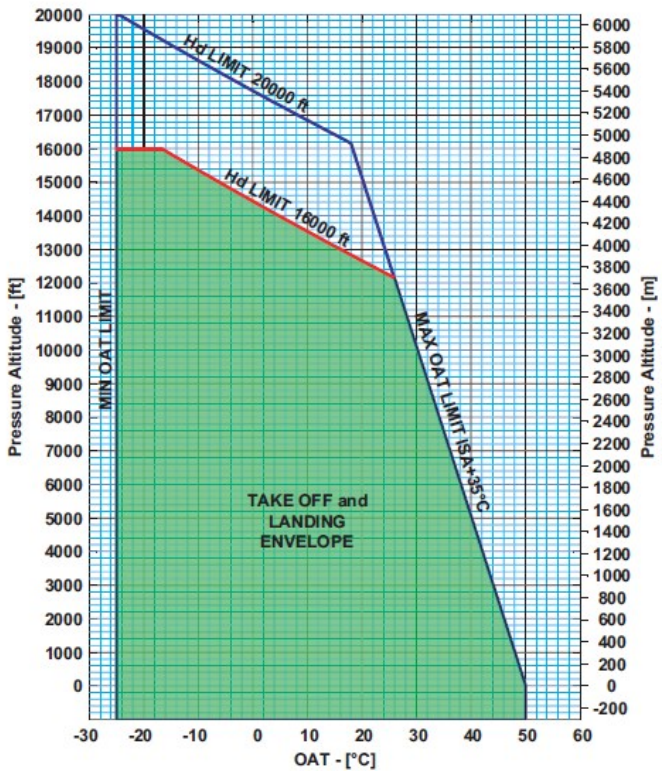

Figure 1-1 CAT A Take-Off and Landing Envelope

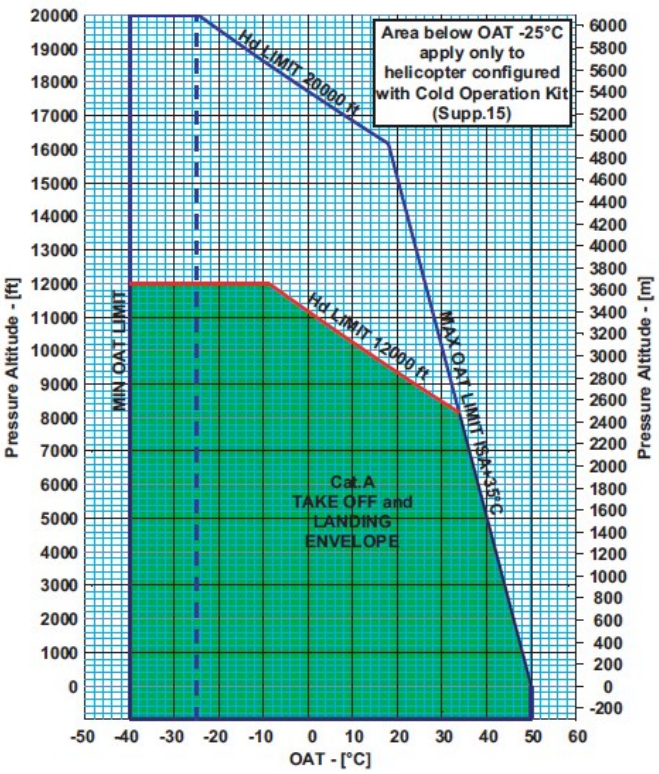

HEIGHT-VELOCITY DIAGRAM

(Figures 4-16 to 4-18)

The Height-Velocity diagram is used to establish if, in the event of a single engine failure during take-off, landing or other operations near the surface, a combination of airspeed and height above ground exists for which a safe single engine landing on a smooth, level and hard surface cannot be assured (dangerous zone).

The Height-Velocity diagram is split in three charts (Charts A, B and C).

CAUTION

The curves below OAT -25°C apply only to the helicopter configured with Cold Operation Kit (Supplement 15).

Chart A

Chart A (Figure 4-16) defines a transfer value, as a function of weight, altitude and temperature, and defines the use of Chart B (Figure 4-17) or Chart C, (Figure 4-18) , if entering, respectively, in Area 1 or Area 2.

Charts B and C

Charts B and C define the shape of the H-V curve. The H-V shape is obtained by joining the high hover point (**HH**), determined by entering the appropriate chart with the pressure altitude, OAT and transfer value, with the fixed points **KN** = 40 ft/30 kts and **LH** = 10 ft/0 kts. Chart B is applicable to Hd below 7000 ft (Area 1 of Chart A). Chart C is applicable to Hd from 7000 ft to the altitude limit, which is 14000 Hp or 14000 Hd whichever comes first. (Area 2 of Chart A).

Yellow Area of Chart B and C

Combination of weight/altitude/temperature at which the shape of the H-V curve is fixed by **LH** = 10 ft/0 kts, **KN** = 40 ft/30 kts, **HH1** = 80 ft/0 kts.

NO H-V AREA (Green area of Chart B and C)

Combination of weight/altitude/temperature at which no H-V curve exists.

Note

The height-velocity diagram does not define the conditions which assure continued flight following an engine failure nor the conditions from which a safe power-off landing can be made.

Figure 4-16 Height - Velocity Diagram - Chart A

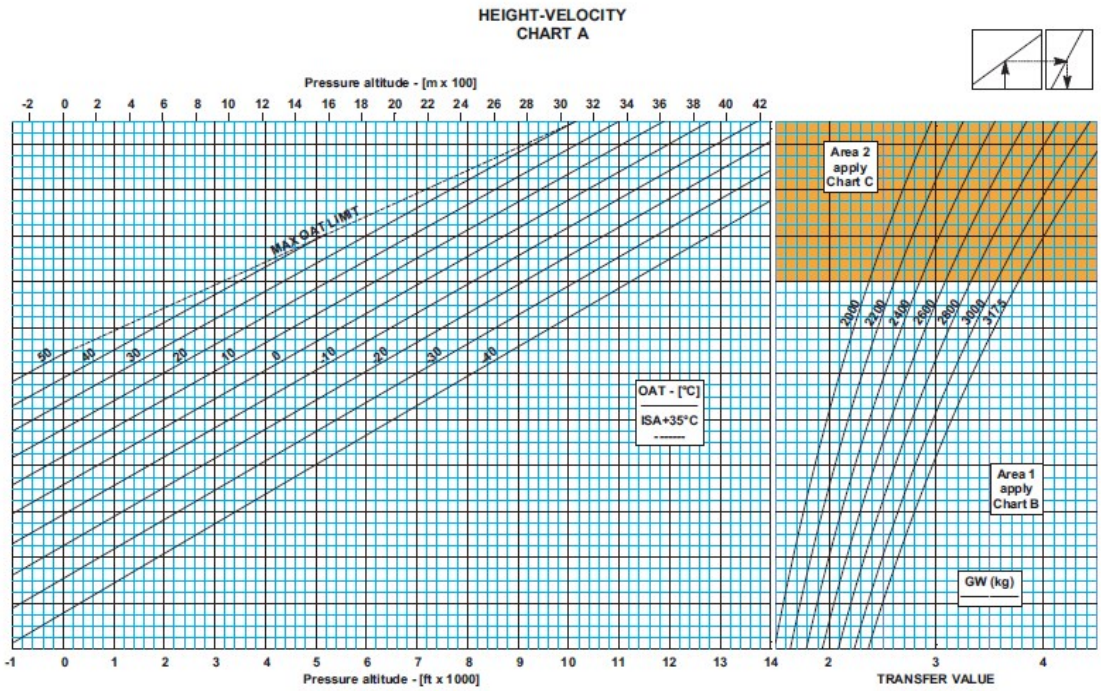

Figure 4-17 Height - Velocity Diagram - Chart B

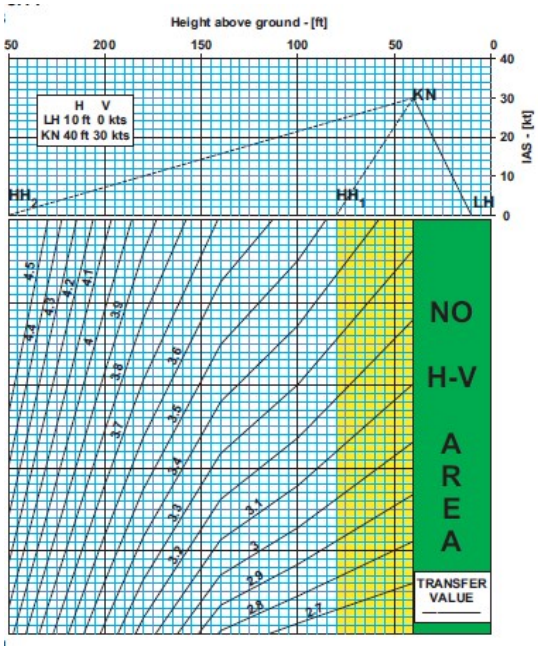

Figure 4-18 Height - Velocity Diagram - Chart C

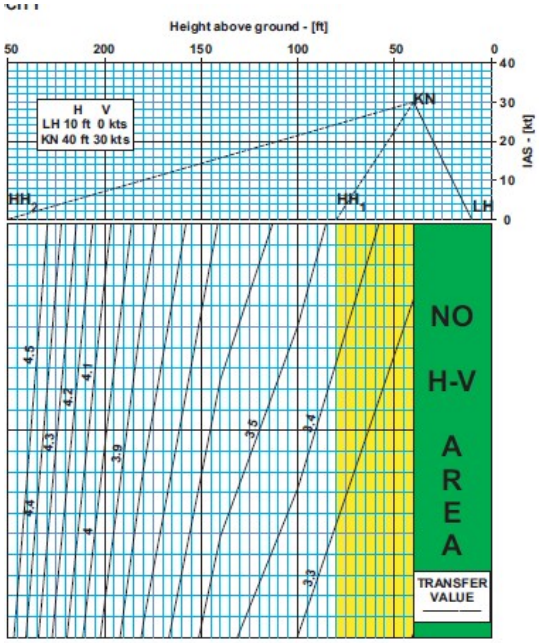

(01.01.08)- Wind Limits

Revizyon No: 3 Revizyon Tarihi: 18.09.2018

AMC3 ORO.MLR.100

WIND SPEED LIMITATIONS FOR ROTOR STARTING AND STOPPING

The maximum wind speed for rotor starting and stopping is **40 knots** from any direction.

OPERATIONS VS ALLOWABLE WIND

(Figures 4-14 and 4-15)

Note

Before using Chart A and/or Chart B of this paragraph, the appropriate helicopter maximum gross weight for Hover (IGE/OGE) must be determined using the pertinent Hover performance charts.

The "Wind Ground Speed Azimuth Envelope IGE/OGE" charts define, at each altitude/OAT combination, the maximum

weight and maximum allowable wind for which satisfactory stability and control has been demonstrated.

Chart A (Figure 4-14) is valid up to a density altitude of 10.000 ft Hd. Maximum relative wind speed in shaded area of Chart A (from 60 to 135 degrees) is determined by Area 2 of Chart B.

Maximum relative wind speed in all azimuths between 10 and 350 degrees, above 10000 ft Hd is determined by Area 1 of Chart B. Table 4-1 gives a simplified method to know the maximum wind allowed in the critical azimuths at several helicopter weights and density altitude. For more accurate evaluation refer to Figures 4-14 and 4-15.

CAUTION
The curves below OAT -25°C apply only to the helicopter configured with Cold Operation Kit (Supplement 15).

WIND LIMITATIONS - CAT A
according to Supplement 04 Cat A Operations

- Take-Off with a tail wind is prohibited.
- The maximum crosswind is 20 kts.
- With a Gross Weight Benefit from a headwind, the maximum crosswind component must not exceed 10 kts.
- For Crosswind and Headwind component computation refer to the wind component chart, Section 4, Figure 4-1.

Figure 4-14 Wind/Ground Speed Azimuth Envelope IGE/OGE - Chart A

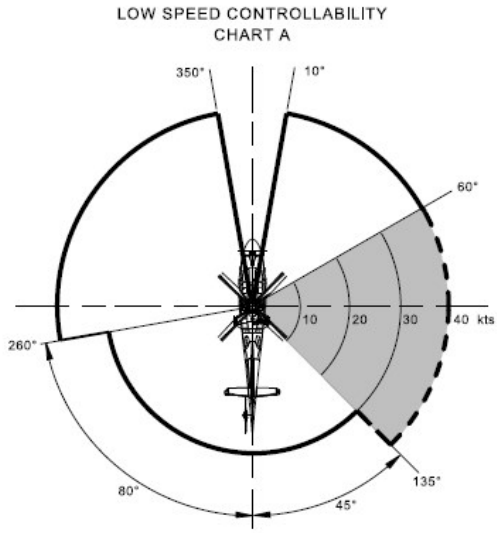

Table 4-1. Simplified table

MAXIMUM LATERAL ALLOWABLE WIND ENVELOPE ALL AZIMUTH (Simplified Table)*					
Altitude Hd \ Weight	2400 kg	2600 kg	2800 kg	3000 kg	3175 kg
Up to 3000 ft	30	30	30	30	30
Up to 5000 ft	30	30	30	30	25
Up to 7000 ft	30	30	30	25	20
Up to 9000 ft	30	30	25	20	-
Up to 10000 ft	30	28	20	-	-
Up to 12000 ft	30	20	-	-	-
Up to 14000 ft	25	-	-	-	-
Up to 16000 ft	20	-	-	-	-

*: For a complete Allowable Wind envelope information refer to applicable RFM chart

(01.01.09)- Performance Limitations

Revizyon No: 8 Revizyon Tarihi: 04.07.2026
AMC3 ORO.MLR.100

AMBIENT AIR TEMPERATURE LIMITATIONS
Minimum ambient air temperature .....-25 °C (-13 °F)
Maximum sea level ambient air temperature .....50 °C (122 °F)

The maximum ambient air temperature for operation decreases with pressure altitude at the standard lapse rate of 2 °C (3.6 °F) every 1000 ft (305 m) up to 20000 ft (6096 m).

For the Temperature Envelope Extension from -25 °C (-13 °F) to -40 °C (-40 °F), refer to Supplement 15 in the AW109SP RFM OES.

ICING LIMITATIONS
Flight into known icing conditions is prohibited.
Flight into freezing rain and freezing fog is prohibited.

SLOPE LIMITATIONS
(AW109SP)

Slope operations are prohibited on surfaces with a slope angle steeper than the following:
From 90° to the left of nose up to 90° to the right of nose up.....10 deg
Nose down .....2 deg

(A109S Trekker)
Slope operations are prohibited on surfaces with a slope angle steeper than the following:

— Nose up..... 12 deg

— Side up..... 10 deg

— Nose down ..... 2 deg

— Nose down (unobstructed tail) ..... 5 deg

Any Landing/Take-Off from surfaces sloped more than 8 degrees must be recorded in the helicopter log-book.

ECS OPERATION
according to Supplement 01 Enviromental Control System
The use of ECS during One Engine Inoperative (OEI) is prohibited.

AIRCRAFT CONFIGURATION - CAT A
according to Supplement 04 Cat A Operations
Category A Operations shall be carried out provided that the following system is installed and operative:
— Engine fire extinguisher, P/N 109-0811-39.

01.01.10-System Limitations

Revizyon No: 3 Revizyon Tarihi: 18.09.2018
AMC3 ORO.MLR.100

GENERAL

Note
The one engine inoperative (OEI) ratings are intended for emergency use only, when one engine becomes inoperative due to an actual malfunction. OEI operations for maintenance or training purposes shall be limited to the OEI Continuous Operation power range.

Note
Transient range must not be used intentionally.

(01.01.10.01)- Power Plant

Revizyon No: 8 Revizyon Tarihi: 04.07.2026
AMC3 ORO.MLR.100

The helicopter is powered by Pratt and Whitney PW207C turboshaft engines.

GAS GENERATOR SPEED (N1)
All Engines Operating (AEO)
Continuous Operation ..... 50 to 97.1%
Take-Off Range (5 minutes)..... 97.2 to 99.7%
Maximum 99.7%
Transient (20 seconds) 104.1%

One Engine Inoperative (OEI)
Continuous Operation ..... 50 to 99.7%
2.5 minutes Range..... 99.8 to 102.9%
Maximum 102.9%
Transient (20 seconds) 104.1%

POWER TURBINE SPEED (N2)

All Engines Operating (AEO)
Transient 95%
Minimum.....99%
Continuous Operation (except for Take-Off and Landing)...99 to 101%
Take-Off, Landing and below Vy .....101 to 102%
Maximum.....102%
Transient (20 seconds)..... 112%

One Engine Inoperative (OEI)
Transient 85%
Minimum.....90%
(AW109SP) :
Cautionary Range .....90 to 98%
(A109S Trekker) :
Cautionary Range ..... 90 to 99%
Continuous Operation (except for Take-Off and Landing).. 99 to 101%
Take-Off, Landing and below Vy .....101 to 102%
Maximum.....102%
Transient (20 seconds)..... 112%

TURBINE OUTLET TEMPERATURE (TOT)
Engine Starting
Maximum (unlimited)..... 650 °C
Maximum transient (2 seconds)..... 875 °C

CAUTION
A linear variation applies between 20 seconds at 650 °C and 2 seconds at 760 °C.
A transient of 2 seconds applies above 760 °C.

All Engines Operating (AEO)
Maximum Continuous ..... 840 °C
Take-Off Range (5 minutes)..... 841 to 900 °C
Transient (20 seconds) ..... 1000 °C

One Engine Inoperative (OEI)
Maximum Continuous ..... 900 °C
2.5 minutes Range..... 901 to 970 °C
Transient (20 seconds) ..... 1000 °C

ENGINE OIL PRESSURE

Note
The oil pressure limits vary as a function of the gas generator speed.

Minimum for ground idle..... Above lower red line
Continuous Operation ....Green band
(variable as a function of N1)
Cautionary Range ....Yellow bands
(variable as a function of N1)
Maximum during engine starting ..... 200 psi

Note
The engine can operate with oil pressure up to 200 psi during or after start or if the oil temperature drops significantly below 71 °C. Oil pressure will decrease as oil temperature increases and is not expected to endure for more than 5 sec. The operation at an oil pressure up to 200 psi is permitted for a period of 10 minutes.

ENGINE OIL TEMPERATURE
Continuous Operation ..... 10 to 125 °C
Maximum.....125 °C

ENGINE STARTER LIMITATIONS
The engine starter duty cycle is the following:
— 45 seconds on, 1 minute off;

— 45 seconds on, 1 minute off;
— 45 seconds on, 30 minutes off.

POWER ASSURANCE CHECK - CAT A
according to Supplement 04 Cat A Operations
Category A operations are prohibited if the engines do not meet the power check requirements. Refer to **ENGINE POWER CHECKS** procedure in Section 4 of the basic RFM.

(01.01.10.02)- Transmissions

Revizyon No: 3 Revizyon Tarihi: 18.09.2018
AMC3 ORO.MLR.100

TORQUE (TRQ)
All Engines Operating (AEO)
Maximum Continuous 100%
Take-Off Range (5 minutes)..... 101 to 107%
Maximum 107%
Transient (6 seconds) 110%

One Engine Inoperative (OEI)
Maximum Continuous 133%
2.5 minutes Range..... 134 to 162%
Maximum 162%
Transient (6 seconds) 173%

TRANSMISSION OIL PRESSURE
Minimum .....30 psi
Continuous Operation .....30 to 50 psi
Cautionary Range .....51 to 70 psi
Maximum .....70 psi

Note
During cold starting conditions, the transmission oil pressure may temporarily rise up to 100 psi.

TRANSMISSION OIL TEMPERATURE
Continuous Operation ..... 0 to 120 °C
Maximum ..... 120 °C

(01.01.10.03)- Rotor Speed

Revizyon No: 3 Revizyon Tarihi: 18.09.2018
AMC3 ORO.MLR.100

POWER-ON (AEO)
Transient 95%
Minimum.....99%
Continuous Operation (except for Take-Off and Landing)...99 to 101%
Take-Off, Landing and below Vy .....101 to 102%
Maximum.....102%

POWER-ON (OEI)
Transient 85%
Minimum 90%
Cautionary Range .....90 to 98%
Continuous Operation (except for Take-Off and Landing)...99 to 101%
Take-Off, Landing and below Vy .....101 to 102%
Maximum.....102%

POWER-OFF
Transient 90%
Minimum.....95%
Continuous Operation ..... 95 to 110%

Maximum..... 110%

Note
Transient range must not be used intentionally.

(01.01.10.04)- Fuel System

Revizyon No: 5 Revizyon Tarihi: 20.02.2024
AMC3 ORO.MLR.100

FUEL MANAGEMENT SYSTEM
It is prohibited to rely upon Fuel Flow data for flight planning and navigation.

FUEL PRESSURE
Cautionary Range.....0 to 7 psi
Continuous Operation .....8 to 25 psi
Maximum .....25 psi

FUEL QUANTITY
Total ..... 460 kg
(575 liters at 0.8 kg/liter)

FUEL - GENERAL
according to Supplement 25 Supplementary Fuel Tanks

The Auxiliary Fuel Tanks installation P/N 109-0813-32 provides an additional **230 liters** capacity. It consists of two tank cells (**RH cell of 94 liters** and **LH cell of 136 liters**) installed behind the three aft passenger seats. However the installation can be arranged as follows:

— both LH and RH tank cells installed;
— only RH tank cell installed.

The fuel transfer from the auxiliary fuel tank cells to the main fuel cell is by gravity. The two tank cells are separated by panels; each cell is provided with a fuel level probe.

SERVICING - AUXILIARY FUEL TANKS
according to Supplement 25 Supplementary Fuel Tanks
RH fuel cell LH fuel cell
Capacity 94 liters 136 liters
Usable 94 liters 136 liters

TOTAL UNUSABLE FUEL
In coordinated flight..... 10 kg
(12 liters at 0.8 kg/liter)

FUEL TYPES
The fuels shown in Table 1-1 have been authorized for use with the Pratt & Whitney PW207C engines.

Table 1-1 Authorized Fuels

Kerosene Type	Applicable Specification
JET A	ASTM D1655
JET A-1	ASTM D1655
JP-5 *	MIL-T-5624
JP-8 *	MIL-T-83133
No. 3 Jet fuel (RP-3) ***	GB 6537-2018
R.T.	GOST 10227-86
R.T.	GSTU 320.00149943.007-97
TS-1**	GOST 10227-86
TS-1**	GSTU 320.00149943.011-99

Note
An approved fuel or any mixture of acceptable fuels may be used. However, changing to a fuel with a substantially different heating value or specific gravity may require maintenance in the form of engine fuel control (trimmer) adjustment. Refer to

the Pratt & Whitney PW207C engine manual.

Note
Fuel grades marked with an asterisk (*) contain a fuel system icing inhibitor (FSII). For JP-8, MIL-T-83133C allows two grades. The grade meeting NATO code F-34 has FSII while the grade meeting code F-35 has no FSII unless specifically requested.

Note
Fuel grades marked with double asterisk (**) are for occasional use only. Refer to Pratt & Whitney PW207C Maintenence Manual for full details and restrictions.

Note
*** The use of No. 3 Jet Fuel with additives T1502 or T1602 is prohibited.

Note
For operations below +4°C, the use of antiice additive is authorized but not mandatory since the helicopter is equipped with an airframe anti-ice fuel filter. For additive requirements and blending procedures refer to the Pratt & Whitney PW207C engine manual.

EMERGENCY FUELS
Table 1-2 presents a list of fuels approved for emergency use. Emergency fuels should only be used whenever any of the authorized fuels are not available. Refer to the Pratt & Whitney PW207C Manual for full details.

Table 1-2 Emergency Fuels

Fuel Type	Applicable Specification	Restrictions
Automotive Diesel CPW 46	Arctic Grade	Do not use below -15 °C (5 °F) OAT
	Winter Grade	Do not use below -7 °C (20 °F) OAT
	Regular Grade	Do not use below 5 °C (40 °F) OAT
Aviation Gasoline Grades: 80, 100 and 100 LL	MIL-G-5572	Do not use for longer than 150 hours during any period between engine overhauls. Engine operation in suction mode is prohibited.

(01.01.10.05)- Lubricant

Revizyon No: 3 Revizyon Tarihi: 18.09.2018
AMC3 ORO.MLR.100

AUTHORIZED ENGINE OILS
The oils shown in Table 1-3 have been authorized for use with the PW207C engines.

Table 1-3 Authorized Lubricating Oils, Type II (5 Centistokes)

Applicable Specification	Brand Names (For reference only)
MIL-PRF-23699	Aero-Shell Turbine Oil 500 Aero-Shell Turbine Oil 560 BP Turbo Oil 2380 (formerly Exxon Turbo Oil 2380) BP Turbo Oil 25 (formerly Exxon Turbo Oil 25) Castrol 5000 Mobil Jet Oil II Royco Turbine Oil 500 Royco Turbine Oil 560 Turbonycoil 525-2A

Note
Engine oil tank capacity is 5.12 liters (1.35 US Gallon).

Note
Mixing of the different brands and types is prohibited.

AUTHORIZED TRANSMISSION OILS
The oils shown in Table 1-4 have been authorized for use with the main transmission and the tail rotor gearbox lubrication systems.

Table 1-4 Authorized Lubricating Oils

Designation	Specification
BP Turbo oil 2380 (formerly EXXON Turbo oil 2380)	MIL-PRF-23699
Mobil Jet Oil II	MIL-PRF-23699
Mobil Jet Oil 254	MIL-PRF-23699
Aeroshell Turbine oil 500	MIL-PRF-23699
Aeroshell Turbine oil 555	DOD-PRF-85734
Aeroshell Turbine oil 560	MIL-PRF-23699
Castrol Aero 5000	MIL-PRF-23699
BP Turbo oil 2197	MIL-PRF-23699

Oils are limited to ambient temperatures above -40 °C (-40 °F).

Note
Mixing of oils of different brands and types is prohibited.

(01.01.10.06)- Hydraulics System

Revizyon No: 3 Revizyon Tarihi: 18.09.2018
AMC3 ORO.MLR.100

MAIN SYSTEM FLUID PRESSURE
Minimum..... 1200 psi
Cautionary Range ..... 1200 to 1400 psi
Continuous Operation ..... 1401 to 1600 psi
Maximum..... 1600 psi

NORMAL UTILITY SYSTEM - FLUID PRESSURE
Minimum..... 500 psi
Cautionary Range .....500 to 1140 psi
Continuous Operation .....1141 to 1600 psi
Maximum..... 1600 psi

EMERGENCY UTILITY SYSTEM - FLUID PRESSURE
Minimum.....1140 psi
Maximum..... 1600 psi

APPROVED FLUIDS
The following hydraulic fluids are approved:

- MIL-PRF-5606
- MIL-PRF-83282.

Note
Mixing of fluids of different brands and types is prohibited.

(01.01.10.07)- Wheel Brake

AMC3 ORO.MLR.100

(01.01.10.08)- Pitot Heating

AMC3 ORO.MLR.100

(01.01.10.09)- Electrical System

Revizyon No: 3 Revizyon Tarihi: 18.09.2018

AMC3 ORO.MLR.100

GENERATOR LOAD LIMITATIONS

For each generator

Up to 15000 ft Hp

— Continuous Operation: .....0 to 200 A

— Maximum load at MPOG (no time limitiation):.....160 A

— Maximum load at MPOG (10 minutes):.....160 to 200 A

Above 15000 ft Hp

— Continuous Operation: .....0 to 130 A

— Maximum load at MPOG (no time limitiation):.....130 A

Transient at starting (45 seconds):.....300 A

NAVIGATION LIMITATIONS

MAGNETIC COMPASS

When operating the SRCH LT, the magnetic compass is unreliable.

(01.01.10.10)- AFCS - Automatic Flight Control System

Revizyon No: 3 Revizyon Tarihi: 18.09.2018

AMC3 ORO.MLR.100

FLIGHT MANAGEMENT SYSTEM LIMITATIONS

Operations in European B-RNAV airspace are demonstrated in accordance to EASA AMC 20-4, where GPS stand-alone equipment is used as the only means for B-RNAV operations. This does not constitute an operational approval.

It is prohibited to navigate using the Flight Management System in Dead Reckoning mode.

Note

The Dead Reckoning mode will be automatically activated as the navigation mode only if the GPS systems have failed. The accuracy of the Dead Reckoning mode cannot be guaranteed. IFR en route and terminal navigations are prohibited unless the pilot verifies the currency of the navigation database or verifies each selected waypoint for accuracy by referring to current approved data. IFR approaches and departures must be carried out in accordance with approved instrumental procedures that are retrieved from the FMS approved database. The FMS database must incorporate the current update cycle. For EFIS with SW version 7.0F or previous

CAUTION

Check FMS IFR procedures for continuity on MAP page or NAV LOG page after activating the procedure. In case of discontinuites the FMS could not correctly follow the published procedure. The pilot shall fly attentive and follow the published procedure.

CAUTION

To exit an FMS holding procedure press "CONT" softkey only when inbound holding waypoint.

EN ROUTE AND TERMINAL

It is prohibited to use VNAV mode data for navigation. Traditional IFR approved navigation equipment shall be available to continue the flight including the alternate when GPS integrity is lost (GPS LOI and/or GPS LON displayed on IDU caution list). The ground based aids on the route to be flown or ground based aids for RNAV routes must be operational and aircraft equipment other than GPS suitable for the route to be flown must be serviceable.

RNP/RNAV APPROACHES

It is prohibited to use FMS-GPS for RNP/RNAV approaches with vertical guidance unless Supplement 34 is complied with. RNP/RNAV approaches without vertical guidance to LNAV minima can be accomplished. LP approaches are prohibited.

It is prohibited to perform an IFR approach after the Final Approach Fix if GPS LOI caution is displayed on IDU caution list. If GPS LOI caution is due to a GPS failure, carry out the GPS FAILURE malfunction procedure, or initiate a missed approach. For EFIS with software version A109 7.0D It is prohibited to continue a Non Precision Approach procedures following a PFD failure.

EFIS LIMITATIONS

Skyway simbology does not provide precision approach guidance nor does it guarantee terrain separation. It remains the pilot's responsibility to provide aircraft separation from terrain.

HTAWS LIMITATIONS
The TAWS installed is a class B HTAWS and it provides the following functions:
— Terrain and Obstruction display;
— Forward Looking Terrain Awareness (FLTA);
— Sink Rate after Takeoff or Missed Approach (GPWS Mode 3).

HTAWS must not be used for navigation. Do not attempt to navigate using the terrain depiction.
HTAWS must not be used for terrain following flight. Do not use hue nor grid as cues for altitude or direction. The HTAWS database installed shall be the last update for the region being flown.

CAUTION
The terrain and obstacle display is intended to serve as a terrain and obstacle awareness tool only. The display and database may not provide the accuracy and fidelity on which to base routine navigation decisions and plan routes to avoid terrain or obstacles.

CAUTION
There are many towers , antennas, power lines, and obstructions that are not in the database.

AUTOMATIC FLIGHT CONTROL SYSTEM LIMITATIONS
Minimum AFCS configuration for IFR flight.....2 AP in ATT mode

DUAL AP OPERATION
Flight at altitude below 1000 ft AGL .....Fly attentive
Flight at airspeed above VNE (Power-ON) - 20 KIAS.....Fly manually

SINGLE AP OPERATION
Flight at altitude above 500 ft AGL.....Fly attentive
Flight at altitude at or below 500 ft AGL .....Fly manually
Flight in moderate to high turbulence.....Fly manually

In single AP operation, the AFCS Upper Modes and Flight Director Modes must not be used unless conducting an approach, missed approach, transition to/from the hover or hover.

(01.01.10.11)- Avionic

AMC3 ORO.MLR.100

(01.01.10.12)- Miscellaneous

Revizyon No: 3 Revizyon Tarihi: 18.09.2018
AMC3 ORO.MLR.100

ROTOR BRAKE LIMITATION
Selection of the rotor brake to the ON position is limited as follows:
Rotor Speed (NR) .....below 40%

MISCELLANEOUS LIMITATIONS
Pilot(s) must not use polarized type sun glasses.

MISCELLANEOUS LIMITATIONS - CAT A
according to Supplement 04 Cat A Operations
Category A operations with the torque limiter function disabled is prohibited.

SYSTEM LIMITATIONS - Traffic Advisory System
according to Supplement 21 TAS
The pilot must manoeuvre the helicopter based only on ATC guidance or positive visual acquisition of the conflicting traffic.

TABLE OF CONTENTS

02.01-Normal Procedures and duties assigned to the crew, the appropriate checklists, the system for their use and a statement covering the necessary coordination procedures between flight and cabin/other crew members

02.01.01-Pre-flight

02.01.02-Before Take-off

02.01.03-Systems Check

02.01.04-Taxi, Take-off and Climb

02.01.05-Noise Abatement

02.01.06-In-flight and Descent

02.01.07-Approach, Landing preparation and Briefing

02.01.08-Normal Landing

02.01.09-Shutdown, Post-flight Check

02.02-Crew Communication

02-NORMAL PROCEDURES

AMC3 ORO.MLR.100

02.01-Normal Procedures and duties assigned to the crew, the appropriate checklists, the system for their use and a statement covering the necessary coordination procedures between flight and cabin/other crew members

Revizyon No: 3 Revizyon Tarihi: 18.09.2018

ORO.GEN.110

GENERAL

This section contains instructions and procedures for operating the helicopter from the planning stage, through actual flight conditions, to securing the helicopter after landing.

Normal and standard conditions are assumed in these procedures. Pertinent data in other sections is referenced when applicable. The instructions and procedures contained herein are written for the purpose of standardization and are not applicable to all situations. The minimum and maximum limits, and the normal and cautionary operating ranges for the helicopter and its subsystems are indicated by instrument markings and placards. Refer to Section 1 for details of the operating limitations.

Each time an operating limitation is exceeded, a malfunction or an emergency occurs, an appropriate entry shall be made in the logbook (airframe, engine, etc.). The entry shall state which limit was exceeded, the duration of time, the extreme value attained, and any additional information essential in determining the maintenance action required. As an aid to this task, the IDS software includes logs of limit exceed data, fault data, and caution and warning signals which are stored in a Non-Volatile Memory for subsequent retrieval.

WARNING

If a failure is detected during pre-flight checks, maintenance action is necessary unless helicopter dispatch is permitted by a MMEL.

FLIGHT PLANNING

Each flight must be planned adequately to ensure safe operations and to provide the pilot with the data to be used during the flight. Essential weight and balance, and performance information should be compiled as follows:

- Check type of mission to be performed and destination.
- Select appropriate performance charts to be used from Section 4.
- Review the appropriate Supplements of this Rotorcraft Flight Manual for the optional equipment installed.

Ascertain proper weight and balance of the helicopter as follows:

- Consult Section 6 - Weight and Balance;
- Ascertain weight of fuel, oil, payload, etc;
- Compute take-off and anticipated landing gross weights;
- Check helicopter center of gravity (CG) locations;
- Check that the weight and CG limitations in Section 1 are not exceeded during the flight.

(02.01.01)- Pre-flight

Revizyon No: 3 Revizyon Tarihi: 18.09.2018

ORO.GEN.110

Each crew member must begin their flight duty time such that a thorough flight preparation can be carried out. The time for flight preparation shall not be less than 30 minutes. Flight preparation can vary according to mission.

Fundamentally, the following aspects shall be covered

- **Weather** data to be evaluated with respect to;
    - flight routes, airspace
    - the period during which the flight shall take place
    - alternate aerodromes, where appropriate
- **NOTAMs** shall be checked for;

  - FIR sectors of the flight
  - Aerodromes
- The creation of an operational flight plan
- The creation and filing of an air traffic services flight plan (when required).
- The calculation of the minimum fuel required for the planned flight.
- The creation of a mass calculation (in table form) with confirmation of the centre of gravity (in graph form) taking into account the particular equipment for the mission involved and the loading for the planned flight.
- Carrying out a visual inspection of the helicopter prior to flight (external and internal check in accordance with the checklist.
- A check of the required configuration and equipment for the flight planned.
- A check of the technical log book to ensure that the helicopter is available for the planned flight.
- Further measures
  - For passenger flights a safety briefing shall be given to the passengers to be carried.
  - If cargo is to be carried, the load shall be checked to be as secure.

(02.01.02)- Before Take-off

Revizyon No: 3 Revizyon Tarihi: 18.09.2018

ORO.GEN.110

02.01.02.01 **Safety Briefing**

A safety briefing is to be carried out for every flight. This is carried out by check-in/ground handling staff and shall include:

- The safety equipment of the helicopter
- The use of the safety belts (securing and releasing)
- The operation of the emergency exits
- Approaching the helicopter whilst the rotors are running
- The use of electronic devices during the flight
- An advisory regarding the prohibition of carrying dangerous goods.
- The requirement to wear ear protection

This is given in visual and audible form. If it is not possible to play a safety video, the Commander shall carry out a safety briefing directly in front of the helicopter. The content of the briefing shall reflect the content above.

02.01.02.02 **Pre-Departure**
02.01.02.02.01 **Prior to Starting the Engines**

Engine start with a tailwind is to be avoided. Before the engines are started, all passengers shall be seated in the helicopter with their safety belts on. If available, the ATIS information is to be obtained prior to engine start. Where required, an approval to start engines from ATC is to be obtained (for example, from Clearance Delivery or Ground frequencies).

Prior to starting the engines, the flight crew must ensure that no unauthorised person is present in the vicinity of the helicopter. If authorised personnel are present in the vicinity of the helicopter, the engines can only be engaged if said personnel are wearing adequate hearing protection.

Engines shall be started in accordance with the relevant checklist.

02.01.02.02.02 **Prior to Engaging the Rotor**

Rotor engagement is automatic following engine start. Increased caution is called for where ground conditions are slippy (snow, ice). It may be necessary to prepare the ground surface with anti-slip materials (such as anti-slip mats or sand). The limitations for engaging the rotor as per the RFM are to be observed.

02.01.02.02.03 **Prior to Hovering for Departure**

Before the helicopter taxis for departure, it shall be determined that persons who have entered the helicopter whilst the rotors where running, are at their places with seat belt fastened. The Commander must ensure that a safe taxi to the departure point can be carried out. All system checks are to be carried out in accordance with the checklist. The taxi checklist is to be followed. The clearance is to be obtained (where required).

02.01.02.02.04 **Taxiing for Departure**

During taxi, the flight instruments are to be checked for correct function:
- Direction instruments for proper indication of direction
- Aircraft attitude instruments (EADI, standby ADI) for proper reliable indication of aircraft attitude

The Commander is responsible for the maintaining safe distances whilst taxiing. Taxi speed **shall not be more than twice walking speed**.

An Engine power check is to be carried out in accordance with the RFM.

02.01.02.02.05 **Prior to Departure**

Prior to take-off, a departure briefing is to be carried out:

a) Under Visual Flight Rules (VFR)
- The planned take-off procedure
- The departure route
- The planned altitude

b) Under Instrument Flight Rules (IFR)
- The intended departure
- Recapitulate the departure clearance
- A check of the navigation instruments

Applying the pre-take-off checklist

(02.01.03)- Systems Check

Revizyon No: 3 Revizyon Tarihi: 18.09.2018

ORO.GEN.110

Rotorcraft Flight Manual

02.01.03.01 **Altimeter Setting and Checking**

Altimeters shall be set in accordance with OM A 08.03.03. The standby altimeter shall be set to the appropriate QNH at all times, whereas the PF and PM main altimeters are to be set to the appropriate QNH below transition altitude, or 1013 mb above transition altitude.

'Altitude Pre-select (**ALTA**)' can be a useful aid to preventing altitude busts. However, mis-setting the target altitude will create a high probability of an altitude bust. Crews shall therefore apply the crosschecking procedure used for altimeter setting whenever an ALTA target setting is made or changed.

ALTA may be set on the ground prior to departure? however, it must be re-checked before engagement to guard against any change in the setting once the aircraft has lifted into the hover.

02.01.03.01.01 **Prior to Take-off**

The altimeters shall be set to the local QNH, obtained from the local air traffic service unit. The maximum difference between altimeters shall not be more than 120 ft.

02.01.03.01.02 **In Flight**

a) VFR

For flights in visual meteorological conditions, the QNH of the nearest aerodrome shall be set.
If a flight is receiving a service from air traffic control, the QNH given by ATC shall be set.
If no local QNH is available, the regional QNH shall be set.

For flights over open sea, the standby altimeter shall be set to the radar height upon passing the coastline outbound. If the altitude flown is higher than the radar altimeter can display, the standby altimeter is to be reset to the given QNH.

b) IFR

For flights under IFR, the altimeter is to be set to the air traffic service QNH until reaching the transition altitude. Passing the transition altitude, the altimeter shall be set to the standard QNH of 1013 hPa.

During approach, standard QNH is to be set until descending through the transition layer. Alternatively, the ATC unit may give a QNH to be set prior to reaching the transition layer.

Where standard QNH is used, the Minimum Sector Altitude (MSA) must be corrected in order not to fly below it. This must be done where the ambient pressure is lower than the standard atmosphere value of 1013 hPa. A suitable correction is to increase the MSA by 30 ft per hectopascal difference. Alternatively, a corrected value from standard can be taken from the graphs in the Jeppesen General Airway Manual.

02.01.03.01.03 **Use of radalt (RA) and baralt (min) bug settings**
This function of the system will be used for general operations and IFR approaches. Settings are found on normal checklist and are actions at the appropriate points within the normal operating checklists.

DH/DA SETTINGS RA MIN
Take off 200 20
En Route 200 MSA
Onshore IFR approach 200 (M)DA
ARA MDH -20 MDA
VFR approach 200 20

(02.01.04)- Taxi, Take-off and Climb

Revizyon No: 3 Revizyon Tarihi: 18.09.2018
ORO.GEN.110

GROUND TAXIING TAKE-OFF
1. Nose wheel lock : OFF.
2. Collective and cyclic : Increase collective slowly and move the cyclic stick gently forward to start movement.
3. Pedal brakes : Check operation.
4. Pedals : As required, to select direction.
5. Collective and pedal brakes : To reduce speed and stop, lower the collective and apply pedal brakes.

HOVER TAKE-OFF

Note
Instruction in blue are applicable only if kit P/N 109-B811-02 (fixed landing gear) is not installed.

1. Nose wheel : Align forward.
2. Nose wheel lock : ON.
3. Flight controls : Apply as necessary to lift the helicopter to a 3 ft AGL hover.
4. Flight instruments : Check.
5. Engine parameters : Confirm within limits.
6. Transmission parameters : Confirm within limits.
7. Hydraulic systems parameters : Confirm within limits.
8. N2 / NR :Confirm N2 /NR 102%.
9. Cyclic / Collective : Rotate approximately 10 deg nose down from hover datum. While accelerating increase slightly the torque to avoid loss of altitude.

At 30 KIAS increase torque by 15% and adjust cyclic to obtain 0 deg attitude.

Continue acceleration to Vy. At Vy increase torque as required for the desired flight path.

CAUTION
Do not fly with landing gear operating or extended at speeds above 140 KIAS.

10. Landing gear lever : UP (after 200 ft RAD ALT) MAIN UTIL CHRG caution message is displayed during landing gear retraction, then clears when landing gear is locked. Confirm landing gear is up and locked (3 green lights and red light extinguished).

11. N2 / NR : Confirm N2 / NR stabilizes at 100%.

ROLLING TAKE-OFF
1. Nose wheel : Align forward.
2. Nose wheel lock : ON.
3. Collective and cyclic : Apply as necessary to obtain forward speed on the ground. Apply

collective as necessary to become airborne. Accelerate to Vy and rotate to desired climb attitude.

CAUTION
Do not fly with landing gear operating or extended at speeds above 140 KIAS.

4. Landing gear lever : UP (after 200 ft RAD ALT) MAIN UTIL CHRG caution message is displayed during landing gear retraction, then clears when landing gear is locked. Confirm landing gear is up and locked (3 green lights and red light extinguished).

5. N2 / NR : Confirm N2 / NR stabilizes at 100%.

CLIMB SPEED
The climb speed recommended is the best climb speed of the helicopter, Vy. Vy is 80 KIAS up to 10000 ft, and then decreases by 2 kts every 1000 ft to become 60 KIAS at 20000 ft.

(02.01.05)- Noise Abatement

Revizyon No: 3 Revizyon Tarihi: 18.09.2018
ORO.GEN.110

The following noise levels comply with ICAO Annex 16, Chapter 8, 4th Edition:

Model: AW109SP	**Engine: Pratt & Whitney 207C Maximum Gross Weight: 3175 kg**		
Configuration	**Level Fly-over EPNL (EPNdB)**	**Take-off EPNL (EPNdB)**	**Approach EPNL (EPNdB)**
Clean aircraft. No external kit installed.	88.4	90.5	91.2

(02.01.06)- In-flight and Descent

Revizyon No: 6 Revizyon Tarihi: 08.11.2024
ORO.GEN.110

IN FLIGHT
1. Load Share (LD-SH) switch : As required.
2. TQ LIM pushbutton : **OFF above 40 KIAS.**
3. Pedals : Apply as necessary to maintain direction.
4. Flight instruments : Check.
5. Engine parameters : Confirm within limits.
6. Transmission parameters : Confirm within limits.
7. Hydraulic systems parameters : Confirm within limits.
8. Landing lights (if used) : OFF. LANDING LT ON advisory message suppressed.

CAUTION
Turn both pitot heaters on for flight in visible moisture and/or in rain, regardless of ambient temperature.

9. Pitot heat : As required.
10. Compass : Confirm all synchronized.
11. Radios / Navigation : As required.

Note
When the VHF (COM) systems are tuned on frequencies which are within ±4 MHz, the transmitting radio can produce loss of sensitivities on the receiving radios.

AUTOMATIC FLIGHT CONTROL SYSTEM
Collective Safety Function
The collective safety function (CSF) is active when any collective upper mode (ALT, ALTA,VS, RHT, GS, NGS, GA) is engaged. The function limits, if necessary, the collective commands to prevent:
— Exceedence of Maximum Continuous Power for torque, N1, TOT AEO or OEI. A PWR LIM alert message is displayed on the PFD when Power Limitation is active.

— Entering into autorotation (minimum torque 10% on each engine AEO or 20% OEI). A PWR LIM alert message is displayed on the PFD when Power Limitation is active.
— The aircraft descending through the safety height calculated as a function of descending speed and proximity to the ground. LOW HT alert message is displayed on the PFD when the Low Height Limitation is active.

When Collective Safety Function is active, engaged collective mode is annunciated as degraded (Mode annuciation in amber box flashing for 5 seconds then steady).

ILS APPROACHES
It is recommended that IFR approaches be carried out with both ILS1 and ILS2 receivers tuned on the same frequency.

EFIS SYSTEM
Refer to Chelton Pilot's Operating Guide and Reference for more details on this installation.

FLIGHT MANAGEMENT SYSTEM
The procedures for the use of navigational equipment on Basic RNAV routes should include:
— During the pre-flight planning phase confirm the availability of GPS integrity (RAIM) for the intended flight (route and time). This should be obtained from a prediction program either ground-based or from an alternative method that is acceptable to the Autority.
— Dispatch should not be made in the event of predicted continous loss of RAIM of more than 5 minutes for any part of the intended flight.
— Check navigation database validity before the flight.
— Traditional navigation equipment should be selected to available aids so as to allow immediate cross checking or reversion in the event of loss of GPS navigation capability.

TAWS
— The FLTA function is automatically inhibited when in the Terminal, Departure, IFR Approach or VFR Approach modes and within 2 NM of the reference point.
— The FLTA function is automatically inhibited when IAS or groundspeed is below 50 Kts.
— GPWS Modes 3 is automatically inhibited when below 50 ft AGL (radar altimeter AGL altitude).

FLIGHT HANDLING CHARACTERISTICS
Handling is conventional in normal forward, sidewards and rearwards flight manoeuvres. Flight control forces may be adjusted by altering friction settings.

ENGINE LIMIT GOVERNING
At helicopter power-up, the torque limiter is disabled by default, and the ECU will not prevent the pilot from exceeding the applicable limits.

With the torque limiter disabled, the ECU controls the engine torque according to the following values:

AEO: Torque (TRQ1 + TRQ2) 324%
OEI: Torque 180%

When the TQ LIM pushbutton is depressed (LIMITER ON advisory message displayed), the torque limiter is enabled and the ECU will prevent the pilot from exceeding the following applicable limits:

AEO: Torque (TRQ1 + TRQ2) 220%
OEI: Torque 162%

Note
Regardless of torque limiter status, N1 and TOT always remain limited at 103% and 970 °C respectively.

IN FLIGHT - Traffic Advisory System according to Supplement 21 TAS

CAUTION
Do not attempt manoeuvres based only on traffic information shown by TAS. Information on the display is provided as an aid in visually acquiring traffic, it is not a replacement for ATC instructions and See & Avoid techniques.

(02.01.07)- Approach, Landing preparation and Briefing

Revizyon No: 6 Revizyon Tarihi: 08.11.2024
ORO.GEN.110

APPROACH AND LANDING

Note

The VFR approach function does not provide terrein or obstruction clearance. Extreme care should be taken when using the VFR approach function at night or in marginal VFR conditions.

Note

*Instruction in **blue** are applicable only if kit P/N 109-B811-02 (fixed landing gear) is not installed.*

1. **Landing gear lever** : DOWN. MAIN UTIL CHRG caution message is displayed during landing gear extension, then clears when landing gear is locked. Confirm landing gear is down and locked (3 green lights indicated, red light extinguished). If previously activated, LANDING GEAR caution message clears and audio warning ceases.
2. **TQ LIM pushbutton** : Push to enable TORQUE limiter function, and confirm LIMITER ON advisory message appears.
3. N2 / NR : Below 75 KIAS confirm N2 / NR stabilizes at 102%.
4. Nose wheel lock : ON.
5. Parking brake : OFF. (ON if landing on a slope)
6. Landing lights : As required.

AUTOROTATIVE DESCENT

1. Maintain speed within Power-OFF limits.
2. Reduce collective to enter autorotation.
3. Adjust collective to maintain NR within appropriate limits.
4. Adjust attitude to obtain desired speed:
   - Maximum range is obtained at approximately 120 KIAS and minimum NR.
   - Minimum rate of descent is obtained at Vy and minimum NR.
   - Maximum rate of descent is obtained at Vne Power-OFF and maximum NR.
5. To recover to powered flight, increase collective pitch until freewheels are joined and finally, increase power to stop the rate of descent.

STEEP APPROACHES AND VERTICAL DESCENT MANOEUVRES

Low speed steep approaches (up to 20 kts) and vertical descent manoeuvres should be performed with a rate of descent not exceeding 900 ft/min.

(02.01.08)- Normal Landing

Revizyon No: 3 Revizyon Tarihi: 18.09.2018
ORO.GEN.110

VERTICAL LANDING

CAUTION

While conducting a slope landing, care must be taken to avoid the tail making contact with the ground.

1. Landing path : Reduce the airspeed gradually and at 70 ft AGL flare and apply collective to pass 30 KIAS at 30 ft AGL. Bring the helicopter to a hover at 3 ft AGL. Descend vertically to the ground. After ground contact, lower the collective to the minimum pitch or as necessary if taxiing is required.
2. Pedal brakes : As necessary.
3. Nose wheel lock : OFF if taxiing is required.

RUNNING LANDING

1. Landing path : Reduce the airspeed gradually and apply collective to bring the helicopter to touchdown at a forward speed suitable for the landing surface and with minimum vertical speed.
After ground contact, lower the collective as necessary to control the helicopter.
2. Pedal brakes : As necessary to stop the helicopter or to reach a suitable taxiing speed.
3. Nose wheel lock : OFF if taxiing is required.

(02.01.09)- Shutdown, Post-flight Check

Revizyon No: 6 Revizyon Tarihi: 08.11.2024
ORO.GEN.110

SHUTDOWN
1. Nose wheel lock : ON.
2. Parking brake : ON.
3. Collective lever : Confirm fully down.
4. Cyclic stick and pedals : Centered and trimmed.

CAUTION
*If there is evidence of any abnormal TOT increase after shutdown, perform a **DRY MOTORING RUN**.*

CAUTION
Do not apply collective during rotor deceleration, particularly in windy conditions. Below 85% NR, avoid any cyclic movement except to prevent droop stop contact.

5. ENG 1 and 2 MODE switches : Set to IDLE and then to OFF.

Note
If necessary, the engine may be shut down directly from FLT.

6. FUEL PUMP 1 and 2 switches : Set to OFF. FUEL PUMP 1 and FUEL PUMP 2 caution messages displayed.
7. FUEL VALVE 1 and 2 switches : CLOSED (bars horizontal).
8. XFEED VALVE switch : Confirm in AUTO position.
9. Rotor brake : Apply below 40% NR.
10. PITOT 1 and 2 heat switches : OFF.
11. Miscellaneous switches : OFF.
12. MSTR AVNX switch : As required.
13. INV 1 and INV 2 switches : OFF.
14. External lights : OFF.
15. Cockpit lights : OFF.
16. Rotor brake lever : Disengaged (fully forward).
17. BAT, GEN 1 and GEN 2 switches (gang bar) : OFF only when N1 at 0%.
18. **ELT** : Check flashing light on the remote control panel is OFF.

POST FLIGHT CHECK
If conditions require, perform the following, referring to Section 8 for additional information:

1. Pitot-static tubes, engine intake and exhaust covers : Installed.

CAUTION
Following a slope landing, the parking brake holding capability is guarantee for 2 minutes from rotor stop.

2. Wheel chocks : As required.

(02.02)- Crew Communication

Revizyon No: 3 Revizyon Tarihi: 18.09.2018
ORO.GEN.110

Example:
Person Call Action
New QNH given by ATC
PM QNH 1018 set on the left Sets the new QNH
PF Set on the left and on standby As above
PF Select DIR to, NAV, ALTA
PM Copied, DIR to, NAV, ALTA set
PF ALTA, NAV engaged
PM Pitot Heat selected ON Switches the pitot heat on
PF Checked
etc.

02.02.01 Check List Actions
Example:
Person Call Action

PF Pre Landing Check
PM Pre-Landing Check Reads and actions landing check items
PM Landing gear
Pilot in the right seat
Selected – Down Deploys the landing gear
PM Checked, three green
PM Checked
etc.

02.02.02 Emergency procedure
Emergency procedures are carried out using the read and do method. Critical actions (ECLs, engine mode switches, hydraulics CBs, fuel system etc.) are always carried out following verification by the other crew member.
Example:
Person Call Action
PM Engine mode switch No. 1 identified
PF Verified Verifies that the correct switch is identified by the PM
PM Selected to OFF
Where the PM In carries out an emergency procedure, it should be considered whether management of radio calls should be assumed by the PF in order to enable the PM to concentrate on the checklist. This can be achieved with the crew phrase:
"I have the radios"

02.02.03 Departure
02.02.03.01 At the aerodrome
02.02.03.01.01 Taxi / hover to the take-off point

Prior to taxi /hover a clearance or field information shall be obtained
Person Call Action
PF Taxi Check
PM Taxi Check Reads the items on the checklist etc.
PM Checklist completed
Prior to departure, a take-off briefing is to be carried out

02.02.03.01.02 Prior to lifting into the hover
Person Call Action
PF Pre take-off check
PM Pre take-off check Reads the checklist
etc.
PM Checklist completed

02.02.03.01.03 In the hover
Person Call Action
PF Lifting Adds power in order to come into the hover
PM Hover power X%
PF Checked
PM T&P's green
PF Rotate / Applying power (vertical t/o)
Adds power in accordance with the CAT A procedure
PM POWER, POWER, … Set Until the power value for the procedure is reached
PM TDP Decision
PM VToss Upon reaching VToss
PF Checked
PM Vy
PF Checked

02.02.03.01.04 During departure
Person Call Action
Once 500 ft AGL has been reached
PF 500 ft - After Take-Off Check
PM After Take Off Check Reads out the items on the checklist

02.02.04 Cruise flight
The PM conducts all communications during the flight with all parties

02.02.05 Descent- / Approach
During descent the PM should announce the altitude in 1000 ft intervals.
Below 500 ft, the altitude shall be announced in intervals of 100 ft.

02.02.05.01 At the aerodrome
The PF announces each turn of direction.
Person Call Action
PF Turning Base Initiates the turn
PM Clear right/left (insofar as necessary)
PF Starting Descent Initiates the turn
PM Checked
On final under 500 ft:
Person Call Action
PM Passing 400, 60 knots
PF Checked
PM Passing 300, 50 knots
PF Checked
PM Approaching LDP, 100 to go
PF Checked
PM LDP
PF Decision / go around According to conditions at the decision point

02.02.06 Deviation Calls
If the PM detects deviations from defined flight parameters (such as speed, descent rate, bank angle, deviation from CAT procedure) this shall be verbalised to the PF. If there is no prompt response from the PF during a critical flight phase (especially under 1000 ft AGL), and there is doubt as to the safe execution of the flight, the PM shall assume immediately control with the words "I have control". Generally, crew internal communication shall follow the following format:
Person Call Description
PM Check altitude / descent rate / bank angle
Deviation from the altitude / descent rate /bank angle
PF Correcting

TABLE OF CONTENTS

03.01-Abnormal and/or Emergency Procedures and duties assigned to the crew, the appropriate checklists, the system for their use and a statement covering the necessary coordination procedures between flight and cabin/other crew members

03.01.01-Crew Incapacitation

03.01.02-Fire and Smoke Drills

03.01.03-Flight in Thunderstorms - Lightning

03.01.04-Distress Communications and alerting ATC to Emergencies

03.01.05-Engine Failure

03.01.06-System Failures

03.01.07-Guidance for Diversion in case of serious Technical Failure

03.01.08-Ground Proximity Warning, including for Helicopters Audio Voice Alerting Device (AVAD) warning

03.01.09-ACAS/TCAS Warning/Audio Voice Alerting Device (AVAD) warning for Helicopters

03.01.10-Windshear

03.01.11-Autorotative Landing / Ditching

03.01.12-Birdstrike

03-ABNORMAL AND/OR EMERGENCY PROCEDURES

AMC3 ORO.MLR.100

03.01-Abnormal and/or Emergency Procedures and duties assigned to the crew, the appropriate checklists, the system for their use and a statement covering the necessary coordination procedures between flight and cabin/other crew members

Revizyon No: 3 Revizyon Tarihi: 18.09.2018

ORO.GEN.110

GENERAL

This section contains the procedures that must be performed in the event of an emergency or malfunction. These procedures are based on experience acquired in the operation of helicopters, in general, and on flight tests conducted on this particular model of helicopter. The procedures used in each actual emergency or malfunction must result from consideration of the complete situation. Multiple emergencies or malfunctions may require a departure from normal corrective procedures detailed in this section. All corrective action procedures listed herein assume the pilot gives first priority to helicopter control and safe flight path.

PROCEDURES LOGIC

The majority of the Emergency and Malfunction procedures that follow are presented in the form of logic trees (flow charts). These logic trees have been formulated based on analysis and test of the cockpit indications that would be available to the flight crew following the emergencies/ malfunctions that are included in this section. For complex emergencies/malfunctions, cockpit indications coupled with the answers to "Yes/No" type questions (as indicated on the charts) should enable the flight crew to analyze the type of emergency/malfunction that has occurred, the branch of the;"tree";that should be followed and the corrective action that should be taken. In order to analyze some types of emergencies/malfunctions, answers to "+", "IF", "AND" and "OR" statements may be required. In these cases, the statements are presented in bold text ("**+**", "**IF**", "**AND**", "**OR**") to be more conspicuous. It is emphasized that attention should be paid to this symbology to avoid a mistake in the emergency/malfunction analysis and subsequent incorrect crew action. **Required** crew actions are also presented in bold type.

DEFINITIONS

SAFE OEI FLIGHT

In general, safe OEI flight is defined to mean flight with one engine inoperative and:

1. a sustainable airspeed of not less than 45 KIAS,
2. the ability to obtain a positive rate of climb at acceptable power levels and
3. an altitude which provides sufficient clearance from the ground / obstacles / clouds so that required manoeuvring can be reasonably achieved.

EFIS WARNING / CAUTION / ADVISORY SYSTEM

The EFIS system has an integrated audio/visual warning system that monitors a wide variety of parameters and provides annunciations for conditions that demand pilot awareness. There are four categories of annunciations: advisories, AFCS alerts, cautions and warnings. Warnings are displayed with red flags and an aural annunciation that repeats until the condition goes away or is acknowledged by the pilot. Cautions are displayed with yellow flags and a single aural annunciation.

AFCS alerts are displayed with grey flags and no aural annunciation. Advisories are displayed with blue flags and a single aural annunciation. The volume of aural annunciations are adjusted according to severity as follows:

warnings = Full Volume set into aircraft limits
cautions = 0.8 times volume set into aircraft limits
advisories = 0.6 times volume set into aircraft limits

Active aural annunciation is immediately muted by pressing the CAS RESET button on the collective grip. Flags are visually prioritized so that active warning flags are displayed above active caution flags, which are displayed above active advisory flags. Within categories, active flags are stacked in chronological order so that the most recent annunciation appears on top.

(03.01.01)- Crew Incapacitation

Revizyon No: 3 Revizyon Tarihi: 18.09.2018

ORO.GEN.110

Opeartor Procedure

Indications of incapacitation:

- The crew member does not react when spoken to.
- The crew member answers out of context (confused answer).
- The crew member responds in context, but fails to carry out the procedure.
- The crew member makes illogical decisions and deviates from standard procedures.

Immediate measures in the event of crew incapacitation:

1. Control of the helicopter

- Assumption of control ("I have control")
- Take whatever action is necessary in order to deal with the immediate danger.
- Climb to a safe altitude
- Abort the approach (if not stabilised) and carry out the missed approach procedure.

2. Request assistance

- Declare an emergency – to the relevant air traffic service and, if present, other crew members.

3. Assess the situation

- Determine the status of the flight
- What is the fuel state?
- Is the destination the best decision?
- Assess weather factors (avoid flight into IMC, if possible).

4. Secure the incapacitated crew member

- Request help from other crew members if possible.
- If possible, move the seat back into the furthest rear position and lock it.
- Secure the incapacitated crew member with their seat belt.

Once the incapacitated crew member does not pose an imminent danger for the flight:

Flight safety is paramount

5. Discuss the next actions
   a) Abort the flight and return to an aerodrome on land.
   b) According to the condition of the incapacitated person, a landing is possible, when in the immediate vicinity of the installation.
   c) For flights on land, land at the next convenient aerodrome.

In any event, inform the air traffic services and other crew members of intentions.

(03.01.02)- Fire and Smoke Drills

Revizyon No: 5 Revizyon Tarihi: 20.02.2024

ORO.GEN.110

ENGINE FIRE ON GROUND

ENG 1(2) FIRE + Audio Tone and Voice Warning "FIRE ENGINE ONE(TWO) FIRE"

- affected engine power lever grip illuminated.
- affected engine control panel FIRE light illuminated.
- affected engine Eng 1(2) S/OFF FIRE pushbutton FIRE wording illuminated on fire extinguisher panel.

- Confirm engine fire.

- Parking brake:	**ON.**
- PLA:	**OFF.**
- ENG MODE 1 & 2 switches:	**OFF.**
- FUEL PUMP 1 & 2 switches:	**OFF.**
- FUEL VALVE 1 & 2 switches:	**CLOSED.**
- XFEED VALVE switch:	**CLOSED.**

On affected engine:

- S/OFF FIRE pushbutton: **Lift appropriate guard and press pushbutton (once only).** S/OFF wording illuminates.

Fire extinguisher switch: BTL to 1.

fire warning extinguished

YES

NO

- Fire extinguisher switch: BTL to 2.

Carry out EMERGENCY/POST CRASH SHUTDOWN AND EGRESS procedure Page 3-21.

ENGINE FIRE IN FLIGHT

ENG 1(2) FIRE + Audio Tone and Voice Warning "FIRE ENGINE ONE(TWO) FIRE"

- affected engine power lever grip illuminated.
- affected engine control panel FIRE light illuminated.
- affected engine ENG 1(2) S/OFF FIRE pushbutton FIRE wording illuminated on fire extinguisher panel.

Achieve Safe OEI Flight

On affected engine:
ENG MODE switch: IDLE.

Confirm engine fire.

On affected engine:

- ENG MODE switch:	**OFF.**
- FUEL PUMP switch:	**OFF.**
- FUEL VALVE switch:	**CLOSED.**
- XFEED VALVE switch:	**CLOSED.**
- S/OFF FIRE pushbutton:	**Lift appropriate guard and press pushbutton (once only).** S/OFF wording illuminates.
- Fire extinguisher switch:	**BTL to 1.**
- GEN switch:	**OFF.**

Continued Next Page

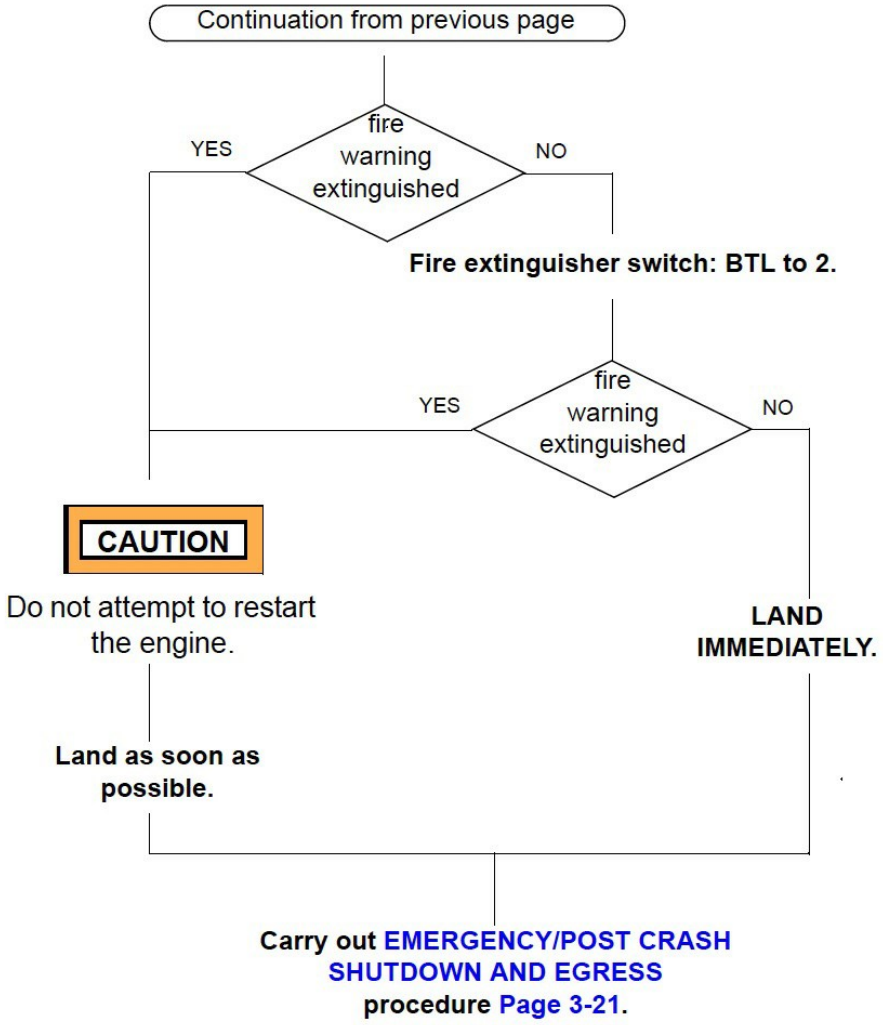

SMOKE IN CABIN, TOXIC FUMES, ETC.

- Front ventilation ports: Open.
- VENT CKPT switch: Set to HIGH.
- Sliding windows (if installed): Open.
- ECS / Heater (if installed) : Check OFF.
- Cockpit utility light : ON (at night).

Land as soon as possible.
Refer to ELECTRICAL FIRE/SMOKE procedure
LAND IMMEDIATELY.
Carry out EMERGENCY/POST CRASH SHUTDOWN AND EGRESS procedure

Note

Electrical fire is suspected when there are visible signs of smoke in cockpit, with distinct acrid smell of burning insulation.

(03.01.03)- Flight in Thunderstorms - Lightning

Revizyon No: 3 Revizyon Tarihi: 18.09.2018

ORO.GEN.110

When flying near **thunderstorm** activity, the helicopter may be struck by **lightning**. If it is suspected that the helicopter has been struck by lightning, proceed as follows:

CAUTION

Avoid performing extreme manoeuvers.

Reduce airspeed to 80 KIAS.
Land as soon as practicable.

If it is suspected that the pilot's Pitot system has been damaged by lightning, proceed as per **STATIC PORT OBSTRUCTION** procedure. If it is suspected that the helicopter has been struck by lightning this must be noted in the helicopter log-book.

(03.01.04)- Distress Communications and alerting ATC to Emergencies

Revizyon No: 3 Revizyon Tarihi: 18.09.2018
ORO.GEN.110

Every observation of a danger for air traffic shall be reported without delay to the competent aviation authorities. Each report must contain all details which are pertinent for air safety.

03.01.04.01 **Emergency Call – MAYDAY (imminent danger)**

Emergency calls shall be made on the frequency in use or the emergency frequency (121.50).

The emergency call shall be initiated as follows:

- Initiation using the emergency term MAYDAY, preferably repeated three times.
- the station called
- own call sign

The emergency message which follows shall contain the following information:

- Nature of the emergency
- The intentions of the crew
- Nature of assistance required
- Information as to position, course, and altitude

An emergency call shall not be unduly delayed, even if its origin is based on an error or misapprehension. The call can be withdrawn.

If no discrete squawk has been set, the transponder shall be set to the emergency code 7700.

If the radio has failed (or this is suspected), an emergency message shall be sent by setting the transponder code 7600.

03.01.04.02 **Urgency Call – PAN-PAN**

Pan-Pan is used for urgency messages, which concern the safety of an aircraft, another craft or person.

The urgency call shall contain the following information:

- Initiation using the urgency term PAN-PAN (preferably repeated three times).
- the station called
- own call sign

The urgency message which follows shall contain the following information:
- Nature of the urgency
- Further information which may be important for providing assistance
- Intentions of the Commander, where appropriate
- Information as to position, course, and altitude

(03.01.05)- Engine Failure

Revizyon No: 5 Revizyon Tarihi: 20.02.2024
ORO.GEN.110

GENERAL

In the event of partial or complete power failure the establishment of a safe flight condition is the prime consideration until the cause of the failure can be analyzed.

CAUTION

Care should be taken in confirming the failed engine prior to commencing engine shutdown as given in the **ENGINE SHUTDOWN IN AN EMERGENCY** procedure

ENGINE FAILURE RECOGNITION

The following cues will be available to the crew following a single or double engine failure:

— Illumination of the MWL and CAS Warning ENG 1(2) OUT caption.
— An audio tone and an "ENGINE 1(2) OUT" voice warning (activated when N1 is 35% or below).
— Reduction in N1, N2, TOT and TRQ on effected engine.
— Depending on collective position at the time of the failure(s), a drop in rotor speed (NR) may occur, accompanied by a yawing tendency.

ENGINE FAILURE

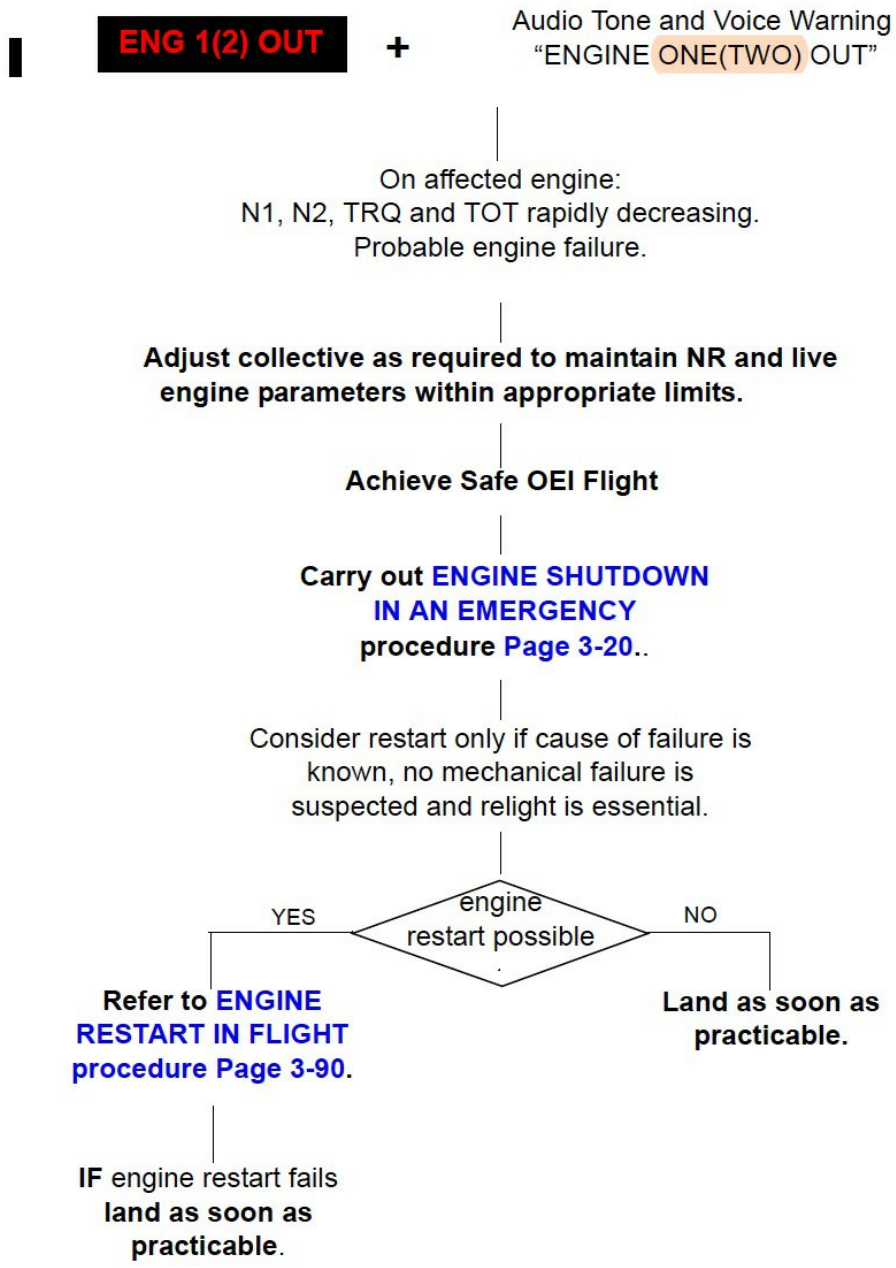

DOUBLE ENGINE FAILURE

Enter into autorotation immediately.

See EMERGENCY AUTORATION PROCEDURE.

If time and conditions permit, carry out the ENGINE SHUTDOWN IN AN EMERGENCY procedure while the helicopter is manoeuvred towards the landing area.

If sufficient additional time is available, attempt an engine re-start, refer to the ENGINE RESTART IN FLIGHT procedure.

ENGINE SHUTDOWN IN AN EMERGENCY

CAUTION

Care should be taken in confirming the failed engine prior to commencing this shutdown procedure.

Following an engine failure/malfunction, achieve Safe OEI Flight. On the failed engine, carry out the following shutdown procedures:
1. ENG MODE switch — OFF.
2. Engine power lever — OFF.
3. FUEL PUMP switch — OFF.
4. FUEL VALVE switch — CLOSED.
5. XFEED VALVE switch — CLOSED.
6. GEN switch — OFF.

CAUTION

If there is evidence of combustion (i.e. a rise in TOT) after engine shutdown in flight, perform **DRY MOTORING RUN** procedure, as per Section 2, to prevent any possible fire.

7. Fuel contents — Monitor and use XFEED VALVE as necessary.

Land as soon as practicable.
If terrain permits, land maintaining some forward speed.

EMERGENCY/POST CRASH SHUTDOWN AND EGRESS
In the event of an emergency or crash landing, priority must be given to ensure that personnel are egressed safely at the most appropriate time.
1. ENG 1 & 2 MODE switches — OFF.
2. Engine power levers 1 & 2 — OFF.
3. FUEL PUMP 1 & 2 switches — OFF.
4. FUEL VALVE 1 & 2 switches — CLOSED.
5. If risk of engine fire exists:
5a. S/OFF FIRE pushbutton — Lift appropriate guard and press pushbutton (once only), S/OFF wording illuminates.
5b. - Fire extinguisher switch — Select BTL to 1 then, if required, select BTL to 2.
6. Rotor brake — ON.
7. BAT switch — OFF.
8. GEN 1 & 2 switches — OFF.

When rotor and helicopter stopped:
9. Helicopter — Egress as soon as possible.

(03.01.06)- System Failures

Revizyon No: 3 Revizyon Tarihi: 18.09.2018
ORO.GEN.110

TRANSMISSION SYSTEM FAILURES
The most common transmission system (main and tail rotor gearbox) failures are of three general types:
1. Lubrication system failure (oil pump, ducts, nozzles, etc)
2. Transmission component failure (gears, bearings, etc)
3. Accessory component failure (coolers, etc)

The main gearbox is monitored with oil pressure and oil temperature indicators and chip detectors, whilst the tail rotor gearbox is monitored with chip detectors. These indicators and chip detectors, as well as the CAS Warning and Caution messages inform the pilot of the operating condition of the system. It is most likely that one or more of these indications will be present if a mechanical transmission failure is imminent. However, whether these indications are present or not, crew sensory perceptions such as:
- abnormal mechanical noise and/or

- heavy vibration levels and/or
- the odour of hot metal fumes

all play an important part in the diagnosis of impending transmission system failures and assist the pilot in determining what actions are required.

MAIN ROTOR CONTROLS SEIZURE

WARNING
If a seizure occurs in the flying controls, greater forces will be required to operate the controls. A reduction in the available control ranges may result and, in this situation, the low speed flight envelope may be restricted.

If the seizure occurred at an airspeed greater than 25 KIAS, the helicopter should be landed into the wind as soon as possible using a running landing procedure and a touchdown speed of approximately 25 KIAS.

If the airspeed is less than 25 KIAS, carry out a running landing at the speed at which the seizure occurred. If the helicopter is in a hover, land vertically.

TAIL ROTOR SYSTEM FAILURES
GENERAL
Tail rotor emergencies may be divided into three major categories:
1. Tail Rotor Drive failure:
   - Tail rotor drive failure in hover.
   - Tail rotor drive failure in forward flight, power-on.
   - Tail rotor drive failure in forward flight, low power or power-off.
2. Tail Rotor Control failure:
   - Tail rotor control failure in hover.
   - Tail rotor control failure in forward flight.
3. Tail Rotor Control Seizure:
   - Tail rotor control seizure in hover.
   - Tail rotor control seizure in forward flight.

Controllability Check
Controllability check consists of slow, progressive and cautious cyclic and collective manoeuvers in level flight at safe altitude aimed at determining the lowest airspeed at which the helicopter directional control can be maintained with the correct power setting. This airspeed should be recorded, and used as a minimum speed for touchdown.

Touchdown
Run-on landings and autorotation landings shall always be carried out nose wheel locked and park brake off. Toe brakes should be applied to slow down the helicopter only after the collective has been lowered to minimum pitch.

(03.01.07)- Guidance for Diversion in case of serious Technical Failure

Revizyon No: 3 Revizyon Tarihi: 18.09.2018
ORO.GEN.110

Throughout this Section, three terms are used to indicate the degree of urgency with which a landing must be effected. In cases where extremely hazardous landing conditions exist such as dense bush, heavy seas or mountainous terrain, the final decision as to the urgency of landing must be made by the pilot.

1. **Land immediately: —** Land at once, even if it means landing on water. Landing is the highest priority. The primary consideration is to assure the survival of the occupants. The consequences of continued flight are likely to be more hazardous than those of landing at a site normally considered unsuitable.

2. **Land as soon as possible: —**Do not continue flight for longer than is necessary to achieve a safe and unhurried landing at the nearest site.

3. **Land as soon as practicable: —**Land at the nearest aviation location or, if there is none reasonably close, at a safe landing site selected for subsequent convenience. Extended flight beyond the nearest approved landing area is not recommended.

PILOT ALERTNESS LEVEL
The level of alertness required by the pilot is a function of the flight regime. Throughout this section, the following terms are used:

1. **Fly Attentive: —**Pilot to maintain close control of the flight path using handson when required.
2. **Fly Manually: —**Pilot directly controls the flight path using hands-on.

(03.01.08)- Ground Proximity Warning, including for Helicopters Audio Voice Alerting Device (AVAD) warning

Revizyon No: 3 Revizyon Tarihi: 18.09.2018

ORO.GEN.110 / CAT.OP.MPA.290

Warning, Caution, Advisory and AFCS alert Messages

WARNING Messages
Flag Aural Annunciation Description
OBSTRUCTION "Warning, Obstruction" Obstruction within TAWS FLTA warning envelope.
TERRAIN "Warning, Terrain" Terrain cell within TAWS FLTA warning envelope.

CAUTION Messages
Flag Aural Annunciation Description
NO TAWS Alert tone TAWS FLTA function inoperative. Indicates that the aircraft is currently beyond extent of terrain database or a failure condition exists that prevents the TAWS FLTA function from operating.
OBSTRUCTION "Caution, Obstruction" Obstruction within TAWS FLTA caution envelope.
TERRAIN "Caution, Terrain" Terrain cell within TAWS FLTA caution envelope.
TOO LOW "Too Low Terrain" Within the GPWS Mode 3 envelope.

ADVISORY Messages
Flag Aural Annunciation Description
TAWS INHBT Chime TAWS Inhibit. TAWS is inhibited through the activation of TAWS inhibit.
TAWS LOW ALT Chime TAWS Low Altitude Mode.

(03.01.09)- ACAS/TCAS Warning/Audio Voice Alerting Device (AVAD) warning for Helicopters

Revizyon No: 3 Revizyon Tarihi: 18.09.2018

ORO.GEN.110

Operation of the Traffic Advisory System (TAS)

The operation of the traffic advisory system is based on the communications through the directional antennae between the processor and the transponders installed on aircraft in the airspace around the helicopter. The processor generates and transmits interrogations to the aircraft and computes the replies to obtain altitude, range, bearing and approach speed of the detected aircraft. Relative altitude information is derived from decoding the altitude replies from nearby aircraft, and comparing the data with the encoded altitude information from the helicopter.

Range information is calculated using time of arrival techniques. Bearing information is calculated using the directional antennae located on the top and bottom of the helicopter. The altitude data from the intruding aircraft is referenced to the same standard pressure altitude of the onboard encoder, thus separation is not depending on the altitude setting.

The positions and the altitude of tracked aircraft are shown on the PFD and the MFD with specific symbology. The PFD shows an additional thumbnail on the lower right corner with traffic information. The MFD has a dedicated page called TRAFFIC page which the flight crew can access to have a more complete awareness of the traffic going on all the around the helicopter.

The system provides both visual traffic advisory and an aural message when it predicts that an aircraft may present a collision threat. These different advisory levels can be displayed to the flight crew:

– Traffic Advisories (TA) that are also audibly announced
– Proximates Advisories (PA) that are related to the traffic within parameters of the display defined by the flight crew
– Other Traffic (OT) that are related to intruders that are not TAs or PAs.

The aural messages are sent directly from the EFIS to the ICS. The aural message is a tone followed by the TRAFFIC, TRAFFIC voice message. The TRAFFIC caution message is shown on the PFD and the MFD together with the TRAFFIC, TRAFFIC voice message. The Traffic Advisory (TA) is generated when the system detects that the current track of an intruding aircraft could result in a near miss or collision. The system uses tau (the time to closest approach)

and the time to reach the same altitude to calculate TAs. An intruding aircraft that is very close but not closing can also generate a TA. Only TAs generates audible warnings.

A TA is generated and an initial TA announcement is issued when the tau value of an intruding aircraft is less than the "TA threshold". A TA is also generated when the range and the altitude separation are both less than the "TA threshold". A TA remains in effect until the range between the helicopter and the intruding aircraft begins to diverge or is no longer detected for 8 s, whichever is longer.

The intruding aircraft are always shown, but the TRAFFIC caution message and the aural message are not given when:
– The AGL altitude of the helicopter is less than 400 ft
– The intruding aircraft is below 200 ft AGL.

Distant aircraft at low altitudes may be partially obscured by terrain. When an ADU that supplies the altitude data to the processor has a failure, the related indication is shown on the EFIS instruments. The AURAL WARN / TAS switch on the miscellaneous control panel permits the flight crew to inhibit the aural annunciations and the relative flags, but the detected traffic continues to be displayed either on the PFD and the MFD. When the AURAL WARN / TAS switch is set to OFF, the TAS INHBT advisory message is shown on the MFD.

(03.01.10)- Windshear

Revizyon No: 3 Revizyon Tarihi: 18.09.2018
ORO.GEN.110

If the crew experience wind shear it shall:

- During landing:
  - Apply maximum available power to arrest the sink rate.
  - Not allow the airspeed to go below 45 KIAS or go above VNE.
  - If normal value for landing cannot be maintained, the landing shall be aborted and a new approach and landing carried out or flight to an alternative aerodrome undertaken.
  - ATC shall be advised of the wind shear.
- During take-off:
  - Maximum available power shall be applied in order to maintain the climb rate and achieve the greatest height above ground.
  - The airspeed shall be kept above 45 KIAS.
  - If the available power is insufficient to assure a safe take-off, a safety landing is to be carried out.
  - ATC shall be advised of the wind shear.

(03.01.11)- Autorotative Landing / Ditching

Revizyon No: 3 Revizyon Tarihi: 18.09.2018
ORO.GEN.110

EMERGENCY AUTOROTATION PROCEDURE
The procedure which follows outlines the steps required to execute a successful emergency power-off landing. Time permitting, consult the appropriate Emergency procedure for the additional steps required to deal with a specific emergency.

1. Collective pitch — Reduce to enter autorotation.
2. Attitude — Adjust as required to obtain and maintain desired airspeed.

Note
An airspeed of Vy and 95% RPM ensures the minimum rate of descent in autorotation.

3. Collective pitch — Adjust as required to maintain rotor speed within limits. (95% to 110% NR)
4. Landing gear — DOWN.
5. Parking brake — Check OFF
6. Landing site — Select and manoeuvre into wind.
7. Briefing — Brief cabin crew and occupants.
8. Harness —Tight.

If time and conditions permits:
- ENG MODE switches — Both OFF.
- FUEL PUMP switches — Both OFF.
- FUEL VALVE switches — Both CLOSED.
- XPND / RADIO — Set emergency / transmit distress call.

9. Flare — At approximately 100 to 70 ft AGL, depending on the weight, initiate a flare, at approximately 10 deg per second, to a maximum 30 deg nose-up angle to reduce the rate of descent (500 ± 100 ft/min) and the forward speed (30 ± 10 KIAS).
10. Collective pitch — Adjust, as required, to maintain NR at 110% maximum during the flare.
11. Pitch attitude / Collective pitch — At approximately 10 ft AGL, reduce pitch attitude to a near level attitude. As the helicopter settles, apply collective pitch, as required, at approximately 4 ft to cushion touchdown.
12. Touchdown airspeed — As required by surface characteristics. If terrain permits, land with forward speed.
13. Collective pitch — Following touchdown, lower promptly.
14. Toe brakes — Apply as required.
15. Shutdown —Execute the **EMERGENCY/POST CRASH SHUTDOWN AND EGRESS** procedure.

Note
Refer to Section 2 for FLIGHT HANDLING CHARACTERISTICS in AUTOROTATIVE DESCENT .

(03.01.12)- Birdstrike

Revizyon No: 3 Revizyon Tarihi: 18.09.2018
AMC3 ORO.MLR.100

If a birdstrike has occurred or believed to have occurred, the aircraft shall land

a) If stark vibrations are present

- For flights over land, a safety landing shall be carried out

b) If engine malfunctions are present

- Malfunction of one engine – land as soon practicable
- Malfunction of both engines – land as soon as possible
- Severe malfunction of both engines – land immediately

The aircraft must undergo maintenance inspection before further flight

c) If there no malfunction is manifest – land as soon as practicable.

After landing a visual inspection shall be carried out.

- If there is evidence of a birdstrike, a technical inspection must be carried out.
- If there is no evidence of a birdstrike, the flight may be continued.

TABLE OF CONTENTS

04.00-Performance - GENERAL
04.01-Performance Class 1 Helicopter
04.02-Performance Class 2 Helicopter
04.03-Performance Class 3 Helicopter

04-PERFORMANCE

CAT.POL.H.100

(04.00)- Performance - GENERAL

Revizyon No: 3 Revizyon Tarihi: 18.09.2018

CAT.POL.H.100 / CAT.POL.H.105

04.00.01 Applicability

(a) KAAN AIR Helicopters will be operated in accordance with the applicable performance class requirements.

(b) Helicopters shall be operated in **Performance Class 1:**
When operated to/from aerodromes or operating sites located in a congested hostile environment, except when operated to/from a public interest site (PIS) in accordance with CAT.POL.H.225;

(c) Unless otherwise prescribed by (b), helicopters that have an MOPSC of 19 or less but more than nine shall be operated in **Performance Class 1 or 2.**

(d) Unless otherwise prescribed by (b), helicopters that have an MOPSC of nine or less shall be operated in **Performance Class 1, 2 or 3.**

04.00.02 General

When showing compliance with the requirements of this section, account shall be taken of the following parameters:

(1) mass of the helicopter;
(2) the helicopter configuration;
(3) the environmental conditions, in particular:
  (i) pressure altitude and temperature;
  (ii) wind:
    (A) except as provided in (C), for take-off, take-off flight path and landing requirements, accountability for wind shall be no more than 50 % of any reported steady headwind component of 5 kt or more;
    (B) where take-off and landing with a tailwind component is permitted in the RFM, and in all cases for the take-off flight path, not less than 150 % of any reported tailwind component shall be taken into account; and
    (C) where precise wind measuring equipment enables accurate measurement of wind velocity over the point of take-off and landing, wind components in excess of 50 % may be established by KAAN AIR, provided that the operator demonstrates to the TR DGCA that the proximity to the FATO and accuracy enhancements of the wind measuring equipment provide an equivalent level of safety;
(4) the operating techniques; and
(5) the operation of any systems that have an adverse effect on performance.

04.00.03 All Performance Classes (a comparison)

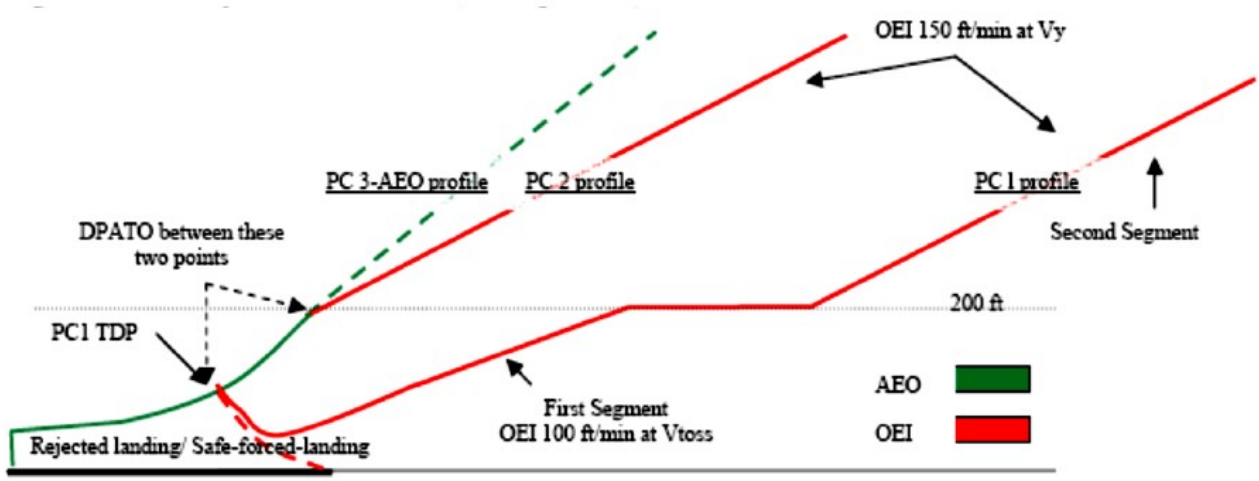

(04.01)- Performance Class 1 Helicopter

Revizyon No: 6 Revizyon Tarihi: 08.11.2024

CAT.POL.H.200 / CAT.POL.H.205 / GM1 CAT.POL.H.205(b)(4) / CAT.POL.H.215 / CAT.POL.H.220 / GM1 CAT.POL.H.215(b)(3)

04.01.01 Performance Data

The Commander calculates the performance data for the performance class according to the RFM for the helicopter concerned. The basis of the calculation are the pressure altitude and temperature of the take-off location (and/or landing location where this value would be limiting). The performance data are to be found in the following parts:

- AW109SP - RFM - Section 4 Performance
- AW109SP - RFM - Supplement 04 CAT A Operations

04.01.02 Performance for Special Take-off and Landing Procedures according to Category A

The AW109SP is certified in accordance with Category A and flown accordingly. The Commander is responsible for ensuring that the correct performance data are applied in order that Category A procedure profiles can be flown in the correct Performance Class, particularly with reference to the take-off and landing phases of flight in the event of a critical engine failure.

The flight performance data for the various take-off and landing profiles are to be found in Appendix (CAT A Procedures)

04.01.03 Take-off

(a) The take-off mass shall not exceed the maximum take-off mass specified in the RFM for the procedure to be used.
(b) The take-off mass shall be such that:
(1) it is possible to reject the take-off and land on the FATO in case of the critical engine failure being recognised at or before the take-off decision point (TDP);
(2) the rejected take-off distance required (RTODRH) does not exceed the rejected take-off distance available (RTODAH); and
(3) the TODRH does not exceed the take-off distance available (TODAH).
(4) Notwithstanding (b)(3), the TODRH may exceed the TODAH if the helicopter, with the critical engine failure recognised at TDP can, when continuing the take-off, clear all obstacles to the end of the TODRH by a vertical margin of not less than 10,7 m (35 ft).
(c) When showing compliance with (a) and (b), account shall be taken of the appropriate parameters of CAT.POL.H.105(c) at the aerodrome or operating site of departure.
(d) That part of the take-off up to and including TDP shall be conducted in sight of the surface such that a rejected takeoff can be carried out.
(e) For take-off using a backup or lateral transition procedure, with the critical engine failure recognition at or before the TDP, all obstacles in the back-up or lateral transition area shall be cleared by an adequate margin.

04.01.03.01 Definition of TODRH

'**Take-off distance required (TODRH)**' in the case of helicopters means the horizontal distance required from the start of the take-off to the point at which take-off safety speed (VTOSS), a selected height and a positive climb gradient are achieved, following failure of the critical engine being recognised at the TDP, the remaining engines operating within approved operating limits.

04.01.04 Elevated Helipad Procedures

The elevated helipad procedure (see figure below) is a special case of the ground level helipad procedure discussed another section.

Elevate Helipad take–off

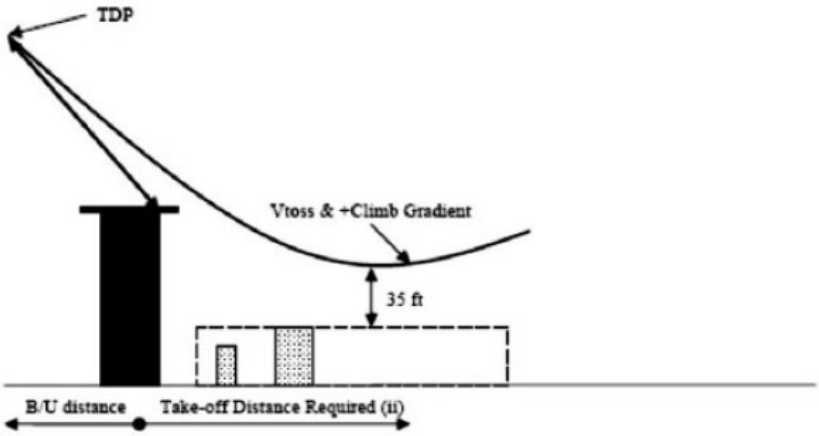

The main difference is that drop down below the level of the take-off surface is permitted. In the drop down phase, the Category A procedure ensures deck-edge clearance but, once clear of the deck-edge, the 35 ft clearance from obstacles relies upon the calculation of drop down. Subparagraph (b) of AMC1 CAT.POL.H.205(b)(4) is applied. Although 35 ft is used throughout the requirements, it may be inadequate at particular elevated FATOs that are subject to adverse airflow effects, turbulence, etc.

04.01.05 En-route — Critical Engine Inoperative

(a) The mass of the helicopter and flight path at all points along the route, with the critical engine inoperative and the meteorological conditions expected for the flight, shall permit compliance with any of the following points:

(1) When it is intended that the flight will be conducted at any time out of sight of the surface, the mass of the helicopter permits a rate of climb of at least 50 ft/minute with the critical engine inoperative at an altitude of at least 300 m (1 000 ft), or 600 m (2 000 ft) in areas of mountainous terrain, above all relevant terrain and obstacles along the route,

(2) When it is intended that the flight will be conducted without the surface in sight, the flight path permits the helicopter to continue flight from the cruising altitude to a height of 300 m (1000 ft) above a landing site where a landing can be made in accordance with CAT.POL.H.220; the flight path clears vertically, by at least 300 m (1000 ft) or 600 m (2000 ft) in areas of mountainous terrain, all relevant terrain and obstacles along the route; Drift-down techniques may be used,

(3) When it is intended that the flight will be conducted in VMC with the surface in sight, the flight path permits the helicopter to continue flight from the cruising altitude to a height of 300 m (1000 ft) above a landing site where a landing can be made in accordance with CAT.POL.H.220, without flying at any time below the appropriate minimum flight altitude; Obstacles shall be considered within a distance on either side of the route as specified for the purpose of determination of the minimum flight altitude in VFR.

(b) When showing compliance with (a)(2) or (a)(3):

(1) the critical engine is assumed to fail at the most critical point along the route;

(2) account is taken of the effects of winds on the flight path;

(3) fuel jettisoning is planned to take place only to an extent consistent with reaching the aerodrome or operating site with the required fuel reserves and using a safe procedure; and

(4) fuel jettisoning is not planned below 1000 ft above terrain.

*NOTE : **FUEL JETTISON***

The presence of obstacles along the en route flight path may preclude compliance with point CAT.POL.H.215(a)(1) with the planned mass at the critical point along the route. In this case, fuel jettison at the most critical point may be planned, provided that the procedures of point (d) of AMC1 CAT.OP.MPA.191(b)&(c) are complied with.

04.01.05.01 RELEVANT TERRAIN AND OBSTACLES IN IFR

All terrain and obstacles along the route within the following distance on either side of the intended track should be considered:

(a) 9.3 km (5 NM) to be increased to 18.5 km (10 NM) if the navigational accuracy cannot be met for 95 % of the total flight time; or

(b) when flying in accordance with PBN procedures, a distance equal to or greater than the required navigation

performance.

04.01.05.02 RELEVANT TERRAIN AND OBSTACLES IN VFR

The terrain and obstacles to be considered are within the distance on either side of the intended track that is specified in the applicable airspace requirements:

(a) for day VFR, the distances are specified in SERA.5005(f);
(b) for night VFR, the distances are specified in SERA.5005(c), or as authorised by TR DGCA.

04.01.06 Landing

(a) The landing mass of the helicopter at the estimated time of landing shall not exceed the maximum mass specified in the RFM for the procedure to be used.
(b) In the event of the critical engine failure being recognised at any point at or before the landing decision point (LDP), it is possible either to land and stop within the FATO, or to perform a balked landing and clear all obstacles in the flight path by a vertical margin of 10,7 m (35 ft). Only obstacles as specified in CAT.POL.H.110 have to be considered.
(c) In the event of the critical engine failure being recognised at any point at or after the LDP, it is possible to:
    (1) clear all obstacles in the approach path; and
    (2) land and stop within the FATO.
(d) When showing compliance with (a) to (c), account shall be taken of the appropriate parameters of CAT.POL.H.105(c) for the estimated time of landing at the destination aerodrome or operating site, or any alternate if required.
(e) That part of the landing from the LDP to touchdown shall be conducted in sight of the surface.

(04.02)- Performance Class 2 Helicopter

Revizyon No: 6 Revizyon Tarihi: 08.11.2024

CAT.POL.H.300 / CAT.POL.H.310 / CAT.POL.H.320 / CAT.POL.H.325

04.02.01 General

Helicopters operated in **Performance Class 2** shall be certified in category A or equivalent as determined by TR DGCA.

04.02.02 OPERATIONS IN PERFORMANCE CLASS 2

(a) **Introduction**

This section describes performance class 2 as established in Part-CAT. It has been produced for the purpose of:

(1) explaining the underlying philosophy of operations in performance class 2;
(2) showing simple means of compliance; and
(3) explaining how to determine — with examples and diagrams:
  (i) the take-off and landing masses;
  (ii) the length of the safe forced landing area;
  (iii) distances to establish obstacle clearance; and
  (iv) entry point(s) into performance class 1.

It explains the derivation of performance class 2 from ICAO Annex 6 Part III and describes an alleviation that may be approved in accordance with CAT.POL.H.305 following a risk assessment. It examines the basic requirements, discusses the limits of operation, and considers the benefits of the use of performance class 2.

It contains examples of performance class 2 in specific circumstances, and explains how these examples may be generalised to provide operators with methods of calculating landing distances and obstacle clearance.

(b) **What defines Performance Class 2**

Performance class 2 can be considered as;

- **performance class 3 take-off or landing, and**
- **performance class 1 climb, cruise and descent.**

It comprises;

- **an all-engines-operating (AEO) obstacle clearance regime for the take-off or landing phases, and**
- **a OEI obstacle clearance regime for the climb, cruise, descent, approach and missed approach phases.**

For the purpose of performance calculations in Part-CAT, the CS/JAR 29.67 Category A climb performance criteria is used:

— 150 ft/min at 1000 ft (at Vy); and depending on the choice of DPATO;
— 100 ft/min up to 200 ft (at VTOSS) at the appropriate power settings.

(c) **The Derivation of Performance Class 2**

PC2 is primarily based on the text of ICAO Annex 6 Part III Section II and its attachments which provide for the following:

(1) obstacle clearance before DPATO: the helicopter shall be able, with all engines operating, to clear all obstacles by an adequate margin until it is in a position to comply with (2);
(2) obstacle clearance after DPATO: the helicopter shall be able, in the event of the critical engine becoming inoperative at any time after reaching DPATO, to continue the take-off clearing all obstacles along the flight path by an adequate margin until it is able to comply with en-route clearances; and
(3) engine failure before DPATO: before the DPATO, failure of the critical engine may cause the helicopter to force land; therefore, a safe forced landing should be possible (this is analogous to the requirement for a reject in performance class 1, but where some damage to the helicopter can be tolerated.)

(d) **Benefits of Performance Class 2**

Operations in performance class 2 permit advantage to be taken of an AEO procedure for a short period during take-off and landing — whilst retaining engine failure accountability in the climb, descent and cruise. The benefits include the ability to:

(1) use (the reduced) distances scheduled for the AEO — thus permitting operations to take place at smaller aerodromes and allowing airspace requirements to be reduced;
(2) operate when the safe forced landing distance available is located outside the boundary of the aerodrome;
(3) operate when the take-off distance required is located outside the boundary of the aerodrome; and
(4) use existing Category A profiles and distances when the surface conditions are not adequate for a reject, but are suitable for a safe forced landing (for example, when the ground is waterlogged).

Additionally, following a risk assessment when the **use of exposure** is approved by the TR DGCA the ability to:
(i) operate when a safe forced landing is not assured in the take-off phase; and
(ii) penetrate the HV curve for short periods during take-off or landing.

04.02.03 Take-off

(a) The take-off mass shall not exceed the maximum mass specified for a rate of climb of 150 ft/min at 300 m (1000 ft) above the level of the aerodrome or operating site with the critical engine inoperative and the remaining engine(s) operating at an appropriate power rating.
(b) For operations other than those specified in CAT.POL.H.305, the take-off shall be conducted such that a safe forced landing can be executed until the point where safe continuation of the flight is possible.
(c) For operations in accordance with CAT.POL.H.305, in addition to the requirements of (a):
(1) the take-off mass shall not exceed the maximum mass specified in the RFM for an all engines operative out of ground effect (AEO OGE) hover in still air with all engines operating at an appropriate power rating; or
(2) for operations from a helideck:
Any helicopter operated from a helideck located in a hostile environment, the take-off mass shall take into account: the procedure; deck-edge miss and drop down appropriate to the height of the helideck with the critical engine(s) inoperative and the remaining engines operating at an appropriate power rating.

(d) When showing compliance with (a) to (c), account shall be taken of the appropriate parameters of CAT.POL.H.105(c) at the point of departure.
(e) That part of the take-off before the requirement of CAT.POL.H.315 is met shall be conducted in sight of the surface.

05.02.04 En-route — Critical Engine Inoperative

The requirement of CAT.POL.H.215 shall be complied with and as defined OM B 04.01.05.

05.02.05 Landing

(a) The landing mass at the estimated time of landing shall not exceed the maximum mass specified for a rate of climb of 150 ft/min at 300 m (1000 ft) above the level of the aerodrome or operating site with the critical engine inoperative and the remaining engine(s) operating at an appropriate power rating.

(b) If the critical engine fails at any point in the approach path:
(1) a balked landing can be carried out meeting the requirement of CAT.POL.H.315; or
(2) for operations other than those specified in CAT.POL.H.305, the helicopter can perform a safe forced landing.

(c) For operations in accordance with CAT.POL.H.305, in addition to the requirements of (a):
(1) the landing mass shall not exceed the maximum mass specified in the RFM for an AEO OGE hover in still air with all engines operating at an appropriate power rating; or
(2) for operations to a helideck:
- Any helicopter operated to a helideck located in a hostile environment,
the landing mass shall take into account the procedure and drop down appropriate to the height of the helideck with the critical engine inoperative and the remaining engine(s) operating at an appropriate power rating.

(d) When showing compliance with (a) to (c), account shall be taken of the appropriate parameters of CAT.POL.H.105(c) at the destination aerodrome or any alternate, if required.
(e) That part of the landing after which the requirement of (b)(1) cannot be met shall be conducted in sight of the surface.

(04.03)- Performance Class 3 Helicopter

Revizyon No: 6 Revizyon Tarihi: 08.11.2024

CAT.POL.H.400 / GM1 CAT.POL.H.400(c) / CAT.POL.H.405 / CAT.POL.H.410 / CAT.POL.H.415

04.03.01 General

(a) Helicopters operated in **Performance Class 3** shall be certified in category A or equivalent as determined by TR DGCA, or category B.

(b) Operations shall only be conducted in a **non-hostile environment**, except:
(1) when operating in accordance with CAT.POL.H.420; or
(2) for the take-off and landing phase, when operating in accordance with (c).

(c) Provided KAAN AIR is approved in accordance with CAT.POL.H.305, operations may be conducted to/from an aerodrome or operating site located outside a congested hostile environment **without an assured safe forced landing capability**:
(1) during take-off, before reaching Vy (speed for best rate of climb) or 200 ft above the takeoff surface; or
(2) during landing, below 200 ft above the landing surface.

*(d) Operations **shall not be conducted**:*
(1) out of sight of the surface;
(2) at night;
(3) when the ceiling is less than 600 ft; or
(4) when the visibility is less than 800 m.

04.03.02 General - THE TAKE-OFF AND LANDING PHASES (PERFORMANCE CLASS 3)

(a) To understand the use of ground level exposure in performance class 3, it is important first to be aware of the logic behind the use of 'take-off and landing phases'.

Once this is clear, it is easier to appreciate the aspects and limits of the **use of ground level exposure**. This GM shows the derivation of the term from the ICAO definition of the 'en-route phase' and then gives practical examples of the use, and limitations on the use, of ground level exposure in CAT.POL.400(c).

(b) The take-off phase in performance class 1 and performance class 2 may be considered to be bounded by 'the specified point in the take-off' from which the take-off flight path begins.
(1) In performance class 1, this specified point is defined as 'the end of the take-off distance required'.
(2) In performance class 2, this specified point is defined as DPATO or, as an alternative, no later than 200 ft above the take-off surface.
(3) There is no simple equivalent point for bounding of the landing in performance classes 1 & 2.

(c) Take-off flight path is not used in performance class 3 and, consequently, the term 'take-off and landing phases' is used to bound the limit of exposure. For the purpose of performance class 3, the take-off and landing phases are as set out in CAT.POL.H.400(c) and are considered to be bounded by:
(1) during take-off before reaching Vy (speed for best rate of climb) or 200 ft above the take-off surface; and
(2) during landing, below 200 ft above the landing surface.

(ICAO Annex 6 Part III, defines **En-route phase** as being "That part of the flight from the end of the take-off and initial climb phase to the commencement of the approach and landing phase.'

The use of take-off and landing phase in this text is used to distinguish the take-off from the initial climb, and the landing from the approach: they are considered to be complimentary and not contradictory.)

(d) **Ground Level Exposure** — and **Exposure for Elevated FATOs in a Non-Hostile Environment** — is permitted for operations under an approval in accordance with CAT.POL.H.305. Exposure in this case is limited to the 'take-off and landing phases'. The practical effect of bounding of exposure can be illustrated with the following examples:

(1) A clearing: KAAN AIR may consider a take-off/landing in a clearing when there is sufficient power, with all engines operating, to clear all obstacles in the take-off path by an adequate margin (this, in ICAO, is meant to indicate 35 ft). Thus, the clearing may be bounded by bushes, fences, wires and, in the extreme, by power lines,

high trees, etc. Once the obstacle has been cleared, by using a steep or a vertical climb (which itself may infringe the height velocity (HV) diagram), **the helicopter reaches Vy or 200 ft**, and from that point **a safe forced landing must be possible**. The effect is that whilst operation to a clearing is possible, operation to a clearing in the middle of a forest is not (except when operated in accordance with CAT.POL.H.420).

(2) An aerodrome/operating site surrounded by rocks: the same applies when operating to a landing site that is surrounded by rocky ground. Once Vy or 200 ft has been reached, a safe forced landing must be possible.

(3) **An elevated FATO**: when operating to an elevated FATO in performance class 3, exposure is considered to be two-fold: **firstly**, to a deck-edge strike if the engine fails after the decision to transition has been taken; and **secondly**, to operations in the HV diagram due to the height of the FATO. Once the take-off surface has been cleared and the helicopter has reached the knee of the HV diagram, the helicopter should be capable of making a safe forced landing.

(e) Operation in accordance with CAT.POL.400(b) does not permit excursions into a hostile environment as such and is specifically concerned with the absence of space to abort the take-off or landing when the take-off and landing space are limited; or when operating in the HV diagram.

(f) Specifically, the use of this exception to the requirement for a safe forced landing (during take-off or landing) does not permit semi-continuous operations over a hostile environment such as a forest or hostile sea area.

04.03.03 Take-off

(a) The take-off mass shall **be the lower of**:
(1) the MCTOM; or
(2) the maximum take-off mass specified for a hover in ground effect with all engines operating at take-off power, or if conditions are such that a hover in ground effect is not likely to be established, the take-off mass specified for a hover out of ground effect with all engines operating at take-off power.

(b) Except as provided in CAT.POL.H.400(b), in the event of an engine failure the helicopter shall be able to perform a safe forced landing.

04.03.04 En-route

(a) The helicopter shall be able, with all engines operating within the maximum continuous power conditions, to continue along its intended route or to a planned diversion without flying at any point below the appropriate minimum flight altitude.

(b) Except as provided in CAT.POL.H.420, in the event of an engine failure the helicopter shall be able to perform a safe forced landing.

04.03.05 Landing

(a) The landing mass of the helicopter at the estimated time of landing shall **be the lower of**:
(1) the maximum certified landing mass; or
(2) the maximum landing mass specified for a hover in ground effect, with all engines operating at take-off power, or if conditions are such that a hover in ground effect is not likely to be established, the landing mass for a hover out of ground effect with all engines operating at take-off power.

(b) Except as provided in CAT.POL.H.400(b), in the event of an engine failure, the helicopter shall be able to perform a safe forced landing.

TABLE OF CONTENTS

05.01-Operational Flight Plan (OFP)

05.02-Data and Instructions Necessary for Pre-flight

05.03-Air Traffic Services (ATS) Flight Plan

05.04-Data and instructions necessary for Pre-flight and In-flight Planning including factors such as Speed schedules and Power settings

05.05-Engine(s)-Out Operations

05.06-List of Documents, Manuals and Information shall be carried on each Flight

05.07-Selection of Aerodromes and Operating Sites

05.08-Fuel/Energy Scheme Fuel/Energy Planning and In-flight Re-planning Policy

05-FLIGHT PLANNING

CAT.OP.MPA.175(a)

(05.01)- Operational Flight Plan (OFP)

Revizyon No: 3 Revizyon Tarihi: 18.09.2018

CAT.OP.MPA.175 / AMC1 CAT.OP.MPA.175(a)

The Commander is responsible for proper and complete flight planning. The Commander can delegate tasks involved in flight planning, but remains responsible for it.

Flight planning includes at least the following tasks:

- The creation of an **operational flight plan**
- Mass and balance calculation
- A passenger &/or cargo manifest
- The determination of an alternate landing site.
- Fuel requirement for the planned flight
- Evaluation of all information relevant to the flight:
  - NOTAMs
  - Weather
  - Approvals, etc.
- Coordination and task assignment for other crew members
- Creation of a flight plan

- The operational flight plan and its use has been described in the OM A 08.01.10
- Items that operational flight plan used and the entries made during flight are listed OM A 08.01.10
- All entries on the operational flight plan will be made concurrently and be permanent in nature.

(05.02)- Data and Instructions Necessary for Pre-flight

Revizyon No: 6 Revizyon Tarihi: 08.11.2024

CAT.OP.MPA.175 / CAT.OP.MPA.175(a) / CAT.GEN.MPA.185 / AMC3 ORO.MLR.100

05.02.01 Flight preparation

(a) An **Operational Flight Plan** will be completed for each intended flight based on considerations of aircraft performance, other operating limitations and relevant expected conditions on the route to be followed and at the aerodromes/operating sites concerned.

(b) The flight will not be commenced **unless the commander is satisfied** that:

(1) all items stipulated in 2.a.3 of Annex IV to Regulation (EC) No 216/2008 concerning the airworthiness and registration of the aircraft, instrument and equipment, mass and centre of gravity (CG) location, baggage and cargo and aircraft operating limitations can be complied with;

(2) the aircraft is not operated contrary to the provisions of the configuration deviation list (CDL);

(3) the parts of the operations manual that are required for the conduct of the flight are available;

(4) the documents, additional information and forms required to be available by CAT.GEN.MPA.180 are on board;

(5) current maps, charts and associated documentation or equivalent data are available to cover the intended operation of the aircraft including any diversion that may reasonably be expected;

(6) space-based facilities, ground facilities and services that are required for the planned flight are available and adequate;

(7) the provisions specified in the operations manual in respect of fuel / energy, oil, oxygen, minimum safe altitudes, aerodrome operating minima and availability of alternate aerodromes, where required, can be complied with for the planned flight;

(8) any navigational database required for performance-based navigation is suitable and current; and

(9) any additional operational limitation can be complied with.

(c) Notwithstanding (a), an operational flight plan is not required for operations under VFR of:

Helicopters with an **MCTOM of 3 175 kg or less**, **by day and over routes navigated** by reference to **visual landmarks** in a **local area** as specified in the OM A.

05.02.02 Information to be Retained on the Ground

(a) The KAAN AIR will ensure that at least **for the duration of each flight** or series of flights:
(1) information relevant to the flight and appropriate for the type of operation is preserved on the ground,
(2) the information is retained until it has been duplicated at the place at which it will be stored or, if this is impracticable
(3) the same information is carried in a **fireproof** container **in the aircraft**.

(b) The information referred to in (a) includes:
(1) **a copy of the Operational Flight Plan**, where appropriate,
(2) **copies** of the relevant part(s) of the aircraft **Technical Log,**
(3) route-specific **NOTAM** documentation if specifically edited by KAAN AIR,
(4) **Mass and Balance** documentation if required; and
(5) **Special Loads** notification.

(05.03)- Air Traffic Services (ATS) Flight Plan

Revizyon No: 6 Revizyon Tarihi: 08.11.2024

AMC1 CAT.OP.MPA.177 / CAT.OP.MPA.177

05.03.01 Submission of the ATS flight plan

(a) If an air traffic services (ATS) flight plan is not submitted because **it is not required by the rules of the air**, adequate information shall be deposited in order to permit alerting services to be activated if required.

(b) When operating from a site where **it is impossible to submit an ATS flight plan**, the ATS flight plan shall be transmitted as soon as possible **after take-off** by the **Commander** or KAAN AIR.

05.03.02 Flights Without an ATS Flight Plan

(a) When unable to submit or to close the ATS flight plan **due to lack of ATS facilities** or any other means of communications to ATS, **Flight Operations Planning and Coordination Dispatcher** is responsible for alerting search and recue (SAR) services with the instructions below;

(b) To ensure that each flight is located at all times, these instructions should:
(1) provide the nominated person with at least the information required to be included in a VFR flight plan, and the **location**, **date** and **estimated time** for re-establishing communications;
(2) if an aircraft is overdue or missing, ensure that the appropriate ATS or SAR service is notified; and
(3) ensure that the information will be retained at a designated place until the completion of the flight.

(05.04)- Data and instructions necessary for Pre-flight and In-flight Planning including factors such as Speed schedules and Power settings

Revizyon No: 3 Revizyon Tarihi: 18.09.2018

AMC3 ORO.MLR.100

The fuel planning and in-flight monitoring is conducted according to the OM A 08.01.07 (Determination of fuel, oil and water/methanol to be carried).

(05.05)- Engine(s)-Out Operations

Revizyon No: 3 Revizyon Tarihi: 18.09.2018

AMC3 ORO.MLR.100

Refer to OM B 03.01.05 Engine Failure

(05.06)- List of Documents, Manuals and Information shall be carried on each Flight

Revizyon No: 3 Revizyon Tarihi: 18.09.2018

CAT.GEN.MPA.180 / AMC1 CAT.GEN.MPA.180 / GM1 CAT.GEN.MPA.180(a)(1) / GM1 CAT.GEN.MPA.180(a)(5)(6) / GM1 CAT.GEN.MPA.180(a)(9) / AMC1 CAT.GEN.MPA.180(a)(13) / GM1 CAT.GEN.MPA.180(a)(14) / AMC1 CAT.GEN.MPA.180(a)(18) /

CAT.GEN.MPA.180(a)(21) / GM1 CAT.GEN.MPA.180(a)(23)

Refer to OM A 08.01.12

(05.07)- Selection of Aerodromes and Operating Sites

Revizyon No: 6 Revizyon Tarihi: 08.11.2024

AMC1 CAT.OP.MPA.192 / AMC1 CAT.OP.MPA.192(a) / GM1 CAT.OP.MPA.192(c)&(d) / CAT.OP.MPA.192

05.07.01 Selection of Aerodromes and Operating Sites – Helicopters

(a) For flights under instrument meteorological conditions (**IMC**), KAAN AIR will select a **take-off alternate** aerodrome **within one-hour flying time at normal cruising speed** if it is not possible to return to the site of departure for meteorological reasons.

(b) At the planning stage, for each instrument flight rules (**IFR**) flight, KAAN AIR will select and specify in the operational and air traffic services (ATS) flight plans **one or more aerodromes** or **operating sites** so that **two safe-landing options are available** during normal operation, except as provided for under point SPA.HOFO.120(b).

(c) KAAN AIR will apply appropriate safety margins to flight planning to take into account a possible deterioration of the available **forecast meteorological conditions** at the **estimated time of landing**.

(d) For **each IFR** flight, KAAN AIR will ensure that sufficient means are available to navigate to and land **at the destination aerodrome** or **at any destination alternate** aerodrome in the event of loss of capability for the intended approach and landing operation.

05.07.02 Planning Minima and Safety Margins for a Destination Aerodrome and Selection of Alternate Aerodromes

(a) When **selecting the destination aerodrome**, KAAN AIR will ensure that one of the following conditions is met:

(1) for a land destination, the duration of the flight and the prevailing meteorological conditions are such that during a period **commencing 1 hour before** and **ending 1 hour after** the **estimated time of arrival** at the aerodrome or operating site, an approach and landing is possible under **VMC** from the minimum safe altitude at the IAF or before;

(2) for a land destination:

(i) the available current meteorological information indicates that the following meteorological conditions at the destination aerodrome will **exist from 2 hours before** to **2 hours after the estimated time of arrival**, or **from the actual time of departure** to **2 hours after the estimated time of arrival**, whichever is **shorter**:

(A) a **ceiling** of at least 120 m (400 ft) above the DA/H or MDA/H of the instrument approach procedure; and
(B) **visibility** of at least 3 000 m;

(ii) a **runway** and **two published instrument approaches** with independent navigation aids are **available** at the aerodrome of intended landing; and

(iii) fuel planning is based upon the approach procedure that requires the **most fuel**, and **15-minute fuel is added to the trip fuel**;

(3) one destination alternate aerodrome is selected, and the appropriate weather reports and/or forecasts indicate that during a period **commencing 1 hour before** and **ending 1 hour after the estimated time of arrival** at the destination, the weather conditions at the destination will be at or above the applicable planning minima as follows:

(i) **RVR or VIS** specified in accordance with point CAT.OP.MPA.110; and

(ii) for **type A instrument approach** operations, ceiling at or above (M)DH;

(4) **one destination alternate** aerodrome is **selected**, and based on the meteorological information that is obtained in accordance with the procedures of the operations manual (OM), there is a reasonable probability of landing at the destination;

(5) **two destination alternate** aerodromes are **selected**; or

(6) the destination aerodrome is **isolated**, and the appropriate weather reports and/or forecasts indicate that during a period **commencing 1 hour before** and **ending 1 hour after the estimated time of arrival** at the destination, the weather conditions at the destination will be at or above the applicable planning minima defined in Table 1 of AMC1 CAT.OP.MPA.192.

(b) KAAN AIR will specify any alternate aerodrome(s) in the **operational flight plan**.

(c) If the site of intended landing is isolated and no alternate aerodrome is available, a **PNR** should be determined.

05.07.03 PLANNING MINIMA FOR TAKE-OFF ALTERNATE AERODROMES

KAAN AIR will select an aerodrome or landing site as a **take-off alternate** aerodrome or landing site **only** when the appropriate weather reports and/or forecasts indicate that during a period **commencing 1 hour before** and **ending 1 hour after the estimated time of arrival** at the take-off alternate aerodrome or landing site, the weather conditions will be **at or above** the applicable landing minima specified in accordance with point CAT.OP.MPA.110. The **ceiling** should be taken into account when the only available approach operations are type A. Any limitations related to OEI operations should be also taken into account.

05.07.04 METEOROLOGICAL INFORMATION

(a) Meteorological data conforms to ICAO Annex 3 and to Annex V (Part-MET) to Regulation (EU) 2017/373. As the following meteorological data are point specific, caution should be exercised when associating it with nearby aerodromes (or helidecks).

(b) **METARs**

(1) Routine and special meteorological observations at offshore installations should be made during periods and at a frequency agreed between the competent authority of the meteorological service provider and KAAN AIR. They should conform to points MET.TR.200 and MET.TR.205 of Part-MET, including the desirable accuracy of observations, which is specified in GM2 MET.TR.210.

(2) Routine and selected special reports are exchanged between meteorological offices in the METAR (aerodrome routine meteorological report) or SPECI (aerodrome special meteorological report) code forms that are prescribed by the World Meteorological Organisation.

(c) Aerodrome forecasts **(TAFs)**

(1) The aerodrome forecast consists of a concise statement of the expected meteorological conditions at an aerodrome and any significant changes expected to occur during a specified period of validity, which is usually **not less than 9 hours**, and **not more than 30 hours**. The forecast includes surface wind, visibility, weather and cloud, and expected changes of one or more of these elements during the period. Additional elements may be included as agreed between the meteorological authority and KAAN AIR. Where these forecasts relate to **offshore installations**, barometric pressure and temperature should be included to facilitate the planning of helicopter landing and take-off performance.

(2) Aerodrome forecasts are most commonly exchanged in the TAF code form, and the detailed description of an aerodrome forecast is promulgated in point MET.TR.220 of Part-MET, together with the operationally desirable accuracy elements that are specified in GM3 MET.TR.220.

(d) Landing forecasts **(TRENDS)**

(1) The landing forecast consists of a concise statement that indicates any significant changes expected to occur at an aerodrome during the **2-hour period immediately following the time of the observation** to which it is appended. It contains one or more of the following meteorological elements: surface wind, visibility, weather phenomena, clouds, and other significant information, such as barometric pressure and temperature, as may be agreed between the meteorological authority and KAAN AIR.

(2) The detailed description of the landing forecast is promulgated in point MET.TR.225 of Part-MET, together with the operationally desirable accuracy of the forecast elements. In particular, the value of the observed cloud height and visibility elements should remain within ± 30 % of the forecast values in 90 % of the cases.

(3) Landing forecasts most commonly take the form of a TREND forecast appended to a local routine report, local special report, METAR, or SPECI.

05.08.01 Fuel/Energy Scheme

(a) KAAN AIR has established, implemented, and will maintain a fuel/energy scheme that comprises:

(1) a fuel/energy planning and in-flight re-planning policy; and

(2) an in-flight fuel/energy management policy.

(b) The fuel/energy scheme shall:

(1) be appropriate for the type(s) of operation performed; and

(2) correspond to the capability of KAAN AIR to support its implementation.

05.08.02 Fuel/Energy Scheme – Fuel/Energy Planning and In-flight Re-Planning Policy

(a) As part of the fuel/energy scheme, KAAN AIR shall establish a fuel/energy planning and in-flight re-planning policy to ensure that the aircraft carries a sufficient amount of usable fuel/energy to safely complete the planned flight and to allow for deviations from the planned operation.

(b) KAAN AIR shall ensure that the fuel/energy planning of flights is based upon at least the following elements:

(1) procedures contained in the operations manual as well as:

(i) current aircraft-specific data derived from a fuel/energy consumption monitoring system; or

(ii) data provided by the aircraft manufacturer; and

(2) the operating conditions under which the flight is to be conducted including:

(i) aircraft fuel/energy consumption data;

(ii) anticipated masses;

(iii) anticipated meteorological conditions;

(iv) the effects of deferred maintenance items or of configuration deviations, or both; and

(v) procedures and restrictions introduced by air navigation service providers.

(c) KAAN AIR shall ensure that the pre-flight calculation of the usable fuel/energy that is required for a flight includes:

(1) **taxi** fuel/energy, which shall not be less than the amount expected to be used prior to take-off;

(2) **trip** fuel/energy;

(3) **contingency** fuel/energy;

(4) **destination alternate** fuel/energy if a destination alternate aerodrome is required;

(5) **final reserve** fuel/energy, which shall not be less than:

(i) if flying under visual flight rules (**VFR**) and navigating by day **with reference to visual landmarks**, **20-minute** fuel/energy at best-range speed; or

(ii) if flying under **VFR** and navigating by means **other than by reference to visual landmarks** or at **night**, **30-minute** fuel/energy at best-range speed; or

(iii) if flying under instrument flight rules (**IFR**), **30-minute** fuel/energy at holding speed at 1 500 ft (450m) above the aerodrome elevation in standard conditions, calculated according to the helicopter estimated mass on arrival at the destination alternate aerodrome or at the destination aerodrome when no destination alternate aerodrome is required;

(6) **extra** fuel/energy, to take into account anticipated delays or specific operational constraints; and

(7) **discretionary** fuel/energy, if required **by the commander**.

(d) KAAN AIR shall ensure that if a flight has to proceed along a route or to a destination aerodrome other than the ones originally planned, **in-flight re-planning procedures** for calculating the required usable fuel/energy include:

(1) trip fuel/energy for the remainder of the flight;

(2) reserve fuel/energy consisting of:

(i) contingency fuel/energy;

(ii) alternate fuel/energy if a destination alternate aerodrome is required;

(iii) final reserve fuel/energy; and

(iv) additional fuel/energy, if required by the type of operation;

(3) extra fuel/energy, to take into account anticipated delays or specific operational constraints; and

(4) discretionary fuel/energy, if required by the commander.

(e) As an alternative to points (b) to (d), for helicopters with a maximum certified take-off mass (MCTOM) of **3 175 kg or less**, flying by day and over routes navigated by reference to visual landmarks, or **for local helicopter operations** (LHO), the fuel/energy policy shall ensure that on completion of the flight, or series of flights, the final reserve fuel/energy is sufficient for:

(1) 30-minute flying time at best-range speed; or

(2) 20-minute flying time at best-range speed, if operating within an area providing continuous and suitable operating sites.

TABLE OF CONTENTS

06.01-Mass and Balance, Loading

06.02-Principles and Methods involved in the Loading and in the Mass and Balance system

06.03-Mass Values for Crew Members

06.04-Mass Values for Passengers and Baggage

06.05-Mass and Balance Data and Produce Documentation;

06.06-Mass and Balance Documentation Contents

06.07-Last Minute Changes to the Load

06.08-Integrity of Mass and Balance data and Documentation generated by a computerised system

06.09-Instructions and data for the calculation of the mass and balance;

06.09.00-WEIGHING of the AIRCRAFT

06.09.01-Calculation System (e.g. index system)

06.09.02-Information and Instructions for Completion of Mass and Balance Documentation, including Manual and Computer generated types

06.09.03-Limiting masses and centre of gravity for the types, variants or individual aircraft

06.09.04-Dry Operating Mass and corresponding Centre of Gravity (CG) or Index

06.09.05-Sample Mass and Balance Sheet

06-MASS AND BALANCE

CAT.POL.MAB.100

(06.01)- Mass and Balance, Loading

Revizyon No: 3 Revizyon Tarihi: 18.09.2018

CAT.POL.MAB.100 / GM1 CAT.POL.MAB.100(g)

Operator Procedure

(a) During any phase of operation, the loading, mass and centre of gravity (CG) of the aircraft shall comply with the limitations specified in the RFM, or the operations manual if more restrictive.
(b) KAAN AIR will establish the mass and the CG of any aircraft by actual weighing prior to initial entry into service and thereafter at intervals of **4 (four) years** if individual aircraft masses are used, or nine years if fleet masses are used. The accumulated effects of modifications and repairs on the mass and balance shall be accounted for and properly documented. Aircraft shall be reweighed if the effect of modifications on the mass and balance is not accurately known.
(c) The weighing shall be accomplished by the manufacturer of the aircraft or by an approved maintenance organisation.
(d) KAAN AIR will determine the mass of all operating items and crew members included in the aircraft **dry operating mass** by weighing or by using standard masses. The influence of their position on the aircraft's CG shall be determined.
(e) KAAN AIR will establish the mass of the traffic load, including any ballast, by actual weighing or by determining the mass of the traffic load in accordance with standard passenger and baggage masses.

- In commercial air taxi; **standart masses** will be used,

(f) In addition to standard masses for passengers and checked baggage, KAAN AIR will use standard masses for other load items, if it demonstrates to the TR DGCA that these items have the same mass or that their masses are within specified tolerances.
(g) KAAN AIR will determine the mass of the **fuel load** by using the actual density or, if not known, the density calculated in accordance with a method specified below, typical fuel density values are:
(1) Gasoline (piston engine fuel) – 0.71
(2) JET A1 (Jet fuel JP 1) – 0.79
(3) JET B (Jet fuel JP 4) – 0.76
(4) Oil – 0.88

(h) KAAN AIR will ensure that the loading of:
(1) its aircraft is performed under the supervision of **qualified personnel**; and
(2) traffic load is **consistent with the data** used for the calculation of the aircraft mass and balance.
(i) KAAN AIR will comply with additional structural limits such as the floor strength limitations, the maximum load per running metre, the maximum mass per cargo compartment and the maximum seating limit.

For helicopters, in addition, KAAN AIR will take account of **in-flight changes** in loading.

(06.02)- Principles and Methods involved in the Loading and in the Mass and Balance system

Revizyon No: 6 Revizyon Tarihi: 08.11.2024

CAT.POL.MAB.100 / AMC1 CAT.POL.MAB.100(d)

The Commander is responsible for ensuring that the helicopter is loaded such that it remains in accordance with the centre of gravity limitations for the aircraft published in the RFM throughout a given flight.

Definitions :
Datum Lines All measurements required to calculate weight and balance are made with respect to datum lines established by the manufacturer. Two datum lines are utilized, a longitudinal datum line and a lateral datum line.
Longitudinal Datum Line (Station 0) is located 1635 mm forward of the front jackpoint.
Lateral Datum Line (butt line 0) is the line extending down the centerline of the helicopter (helicopter viewed from the top) measurements made to the starboard side of the helicopter are positive numbers. Measurements made to the port side of the helicopter are negative.
Arm is the term used for the measured value, in mm, from a datum line to a particular item of interest.
Moment is the product of the weight of an item multiplied by its arm. Moments are expressed in units of kg mm.
Longitudinal Center of Gravity The longitudinal position of the mass balance point of the helicopter, expressed as an arm measured from the longitudinal datum line.
Lateral Center of Gravity The lateral position of the mass balance point of the helicopter, expressed as an arm

measured from the lateral datum line.
Optional Equipment is that equipment which is installed to configure the helicopter for a particular configuration.

Basic Weight/Mass is the empty weight (equipped) less engine oil and special mission equipment. It includes the trapped and unusable fuel and oil.
Empty Weight/Mass (equipped) Weight of aircraft complete with all systems as configured in accordance with the model detail specification with full operating fluids, including engine oil. The helicopter is prepared for service.
Operating Weight/Mass consists of the equipped empty weight plus crew weight.
Dry Operating Mass includes; **(a)** crew and crew baggage, **(b)** catering and removable passenger service equipment, and **(c)** tank water and lavatory chemicals, if applicable.
Gross Weight consists of the Dry Operating Mass plus take-off or landing fuel.
Maximum Gross Weight or Maximum Take Off Weight is determined by performance considerations and must be calculated considering expected mission variables (see Chart E - Weight & Balance Computation Form).

(06.03)- Mass Values for Crew Members

Revizyon No: 3 Revizyon Tarihi: 18.09.2018
AMC2 CAT.POL.MAB.100(d)

(a) KAAN AIR will use the following mass values for **crew** to determine the dry operating mass:
(1) In offshofe flights; **actual masses** including any **crew baggage**;
(2) In commercial air taxi; **standard masses**, including hand baggage, of

- **85 kg for flight crew**/technical crew members and
- 75 kg for cabin crew members.

(b) KAAN AIR will correct the dry operating mass to account for any **additional baggage**. The position of this additional baggage should be accounted for when establishing the centre of gravity of the aircraft.

(06.04)- Mass Values for Passengers and Baggage

Revizyon No: 3 Revizyon Tarihi: 18.09.2018
AMC1 CAT.POL.MAB.100(e)

(a) The predetermined mass for hand baggage and clothing will be established by KAAN AIR on the basis of studies relevant to his particular operation. In any case, it should not be less than:
(1) **4 kg for clothing**; and
(2) **6 kg for hand baggage**.

(b) When determining the actual mass by weighing, passengers' personal belongings and hand baggage should be included. Such weighing should be conducted immediately prior to boarding the aircraft.

(c) **In commercial air taxi**; when determining the mass of passengers by using standard mass values, the standard mass values in Tables 2 below will be used. The standard masses include hand baggage and the mass of any infant carried by an adult on one passenger seat. Infants occupying separate passenger seats should be considered as children.

AMC1 CAT.POL.MAB.100(e) / (c) Table 2;
Standard masses for passengers — aircraft with a total number of passenger seats of 19 or less

Passenger seats:	**1 - 5**	**6 - 9**	**10 - 19**
Male	104 kg	96 kg	92 kg
Female	86 kg	78 kg	74 kg
Children	35 kg		

(1) On all helicopter flights where **no hand baggage is carried in the cabin** or where hand baggage is accounted for separately, **6 kg may be deducted** from male and female masses in Table 2. Articles such as an overcoat, an umbrella, a small handbag or purse, reading material or a small camera are not considered as hand baggage.
(2) For helicopter operations in which a **survival suit** is provided to passengers, **3 kg** should be **added** to the **passenger mass value**.

(d) **Mass values for baggage** For aircraft with 19 passenger seats or less, the actual mass of checked baggage should be **determined by weighing.**

(e) **Revised standard masses** will not be used in KAAN AIR flights.

(f) On any flight identified as carrying a significant number of passengers whose masses, including hand baggage, are expected to significantly **deviate from the standard passenger mass**, KAAN AIR will determine the actual mass of such passengers by weighing or by adding an adequate mass increment.

(g) If standard mass values for checked baggage are used and a significant number of passengers checked baggage is expected to significantly **deviate from the standard baggage mass**, KAAN AIR will determine the actual mass of such baggage by weighing or by adding an adequate mass increment.

(06.05)- Mass and Balance Data and Produce Documentation;

Revizyon No: 3 Revizyon Tarihi: 18.09.2018

CAT.POL.MAB.105

(a) KAAN AIR has established mass and balance data and produce mass and balance documentation prior to each flight specifying the load and its distribution. The mass and balance documentation shall enable the commander to determine that the load and its distribution is such that the mass and balance limits of the aircraft are not exceeded.

(b) **Where mass and balance data and documentation is generated by a computerised mass and balance system, the operator shall verify the integrity of the output data.**

(c) The person supervising the loading of the aircraft shall **confirm by hand signature** or equivalent that the load and its distribution are in accordance with the mass and balance documentation given to the commander. The commander shall indicate his/her acceptance **by hand signature** or equivalent.

SIGNATURE OR EQUIVALENT

AMC1 CAT.POL.MAB.105(c)

Where a signature by hand is impracticable or it is desirable to arrange the equivalent verification by electronic means, the following conditions should be applied in order to make an electronic signature the equivalent ***of a conventional hand-written signature:***

(1) electronic 'signing' by entering a personal identification number (PIN) code with appropriate security, etc.;

(2) the computer system logs information to indicate when and where each PIN code has been entered;

(3) the use of the PIN code is, from a legal and responsibility point of view, considered to be fully equivalent to signature by hand;

(4) the requirements for record keeping remain unchanged; and

(5) all personnel concerned are made aware of the conditions associated with electronic signature and this is documented.

(d) KAAN AIR has specified procedure for **last minute changes** explained in the further section.

(06.06)- Mass and Balance Documentation Contents

Revizyon No: 3 Revizyon Tarihi: 18.09.2018

CAT.POL.MAB.105

(1) Aircraft registration and type;
(2) Flight identification, number and date;
(3) Name of the commander;
(4) Name of the person who prepared the document;
(5) Dry operating mass and the corresponding CG of the aircraft:
(6) Mass of the fuel at take-off and the mass of trip fuel;
(7) Mass of consumables other than fuel, if applicable;
(8) Load components including passengers, baggage, freight and ballast;
(9) Take-off mass, landing mass and zero fuel mass;
(10) Applicable aircraft CG positions; and
(11) **The limiting mass and CG values.**

The information above shall be available in flight planning documents or mass and balance systems. Some of this information may be contained in other documents readily available for use.

(06.07)- Last Minute Changes to the Load

Revizyon No: 3 Revizyon Tarihi: 18.09.2018

CAT.POL.MAB.105

Operator Procedure

Any **last minute change** after the completion of the mass and balance documentation is brought **to the attention of the commander** and **new mass and balance documentation** is prepared.

(06.08)- Integrity of Mass and Balance data and Documentation generated by a computerised system

Revizyon No: 3 Revizyon Tarihi: 18.09.2018

AMC1 CAT.POL.MAB.105(b)

KAAN AIR will verify the **integrity** of mass and balance data and documentation generated by a computerised mass and balance system, **at intervals not exceeding 6 months**. KAAN AIR has established a system; **Flight Operations Manager** to **manually check** that amendments of its input data are incorporated properly in the system and that the system is operating correctly on a continuous basis.

06.09-Instructions and data for the calculation of the mass and balance;

CAT.POL.MAB.100

(06.09.00)- WEIGHING of the AIRCRAFT

Revizyon No: 7 Revizyon Tarihi: 23.07.2025

CAT.POL.MAB.100 / AMC1 CAT.POL.MAB.100(b)

KAAN AIR will establish the mass and the CG of any aircraft by **actual weighing** prior to initial entry into service and thereafter at intervals of **four years** (4 years) if individual aircraft masses are used, or nine years if fleet masses are used.

The accumulated effects of **modifications and repairs** on the mass and balance will be accounted for and properly documented. Aircraft will be **reweighed** if the **effect of modifications** on the mass and balance is **not accurately known**.

(a) **New aircraft** that have been **weighed at the factory** may be placed into operation without reweighing if the mass and balance records have been adjusted for alterations or modifications to the aircraft. Aircraft transferred from one TR/EU operator to another TR/EU operator do not have to be weighed prior to use by the receiving operator; unless more than 4 years have elapsed since the last weighing.

(b) The mass and centre of gravity (CG) position of an aircraft **will be revised** whenever the cumulative changes to the dry operating mass **exceed ±0.5 % of the maximum landing mass**. This may be done by weighing the aircraft or by calculation. If the RFM requires to record changes to mass and CG position below these thresholds, or to record changes in any case, and make them known to the commander, mass and CG position will be revised accordingly and made known to the commander.

(c) When weighing an aircraft, normal **precautions** will be taken consistent with good practices such as:

(1) checking for **completeness** of the aircraft and equipment;

(2) determining that **fluids** are properly accounted for;

(3) ensuring that the aircraft is **clean**; and

(4) ensuring that weighing is accomplished in an **enclosed building**.

(d) Any **equipment used for weighing** will be properly **calibrated**, zeroed, and used in accordance with the manufacturer's instructions. Each scale will be calibrated either by the manufacturer, by a civil department of weights and measures or by an appropriately authorised organisation **within two years** or **within a time period defined by the manufacturer** of the weighing equipment, **whichever is less**.

The equipment will enable the mass of the aircraft to be established accurately. One single accuracy criterion for weighing equipment cannot be given. However, the weighing accuracy is considered satisfactory if the accuracy criteria

in Table1 are met by the individual scales/cells of the weighing equipment used:

Table 1

Accuracy criteria for weighing equipment

For a scale/cell load	An accuracy of
Below 2 000 kg	±1 %
From 2 000 kg to 20 000 kg	±20 kg
Above 20 000 kg	±0.1 %

After any weighing activity or Chart C revision completion;

A copy of the filled and signed document Chart C will be sent **to Flight Operations Manager** **by Continuing Airworthiness Management department (CAMO) related engineer** to provide new Basic Mass, CG and Moment numbers to flight crews. Then Flight Operations Manager will revise OM-B 06.09.04 "Dry Operating Mass and corresponding centre of gravity (CG) or index" table and apply for approval of TR DGCA, and revise draft FOF-06 Mass and Balance Computation form to provide actual numbers to flight crews.

(06.09.01)- Calculation System (e.g. index system)

Revizyon No: 8 Revizyon Tarihi: 04.07.2026

CAT.POL.MAB.100

WEIGHT AND BALANCE

Note

In accordance with EASA procedures, the detail weight and balance data of this section are not subject to EASA approval.

The loading instructions of this section, however, have been accepted by EASA as satisfying all requirements for instructions on loading of the rotorcraft within approved limits of weight and center of gravity, and on maintaining the loading within such limits.

GENERAL

This section provides information for the weight and balance computation of the AW109SP helicopter.

It is the pilot's responsibility to ensure that the helicopter is properly loaded so as to maintain for the duration of the entire flight the Center of Gravity (CG) within the limitations defined in Paragraph WEIGHT AND CENTER OF GRAVITY of SECTION 1 - LIMITATIONS.

WARNING

Operation outside of prescribed weight and balance limitations could result in an accident and serious or fatal injury.

Figures, charts and examples are provided to assist the pilot in computing the proper loading conditions.

Figure 6-1 Helicopter Stations Diagram (AW109SP)

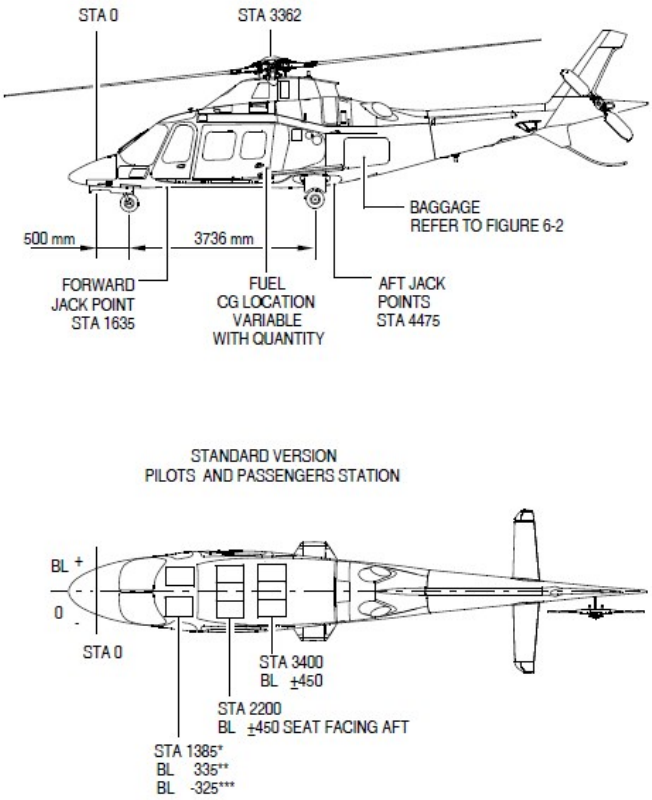

Figure 6-1 Helicopter Stations Diagram (A109S Trekker)

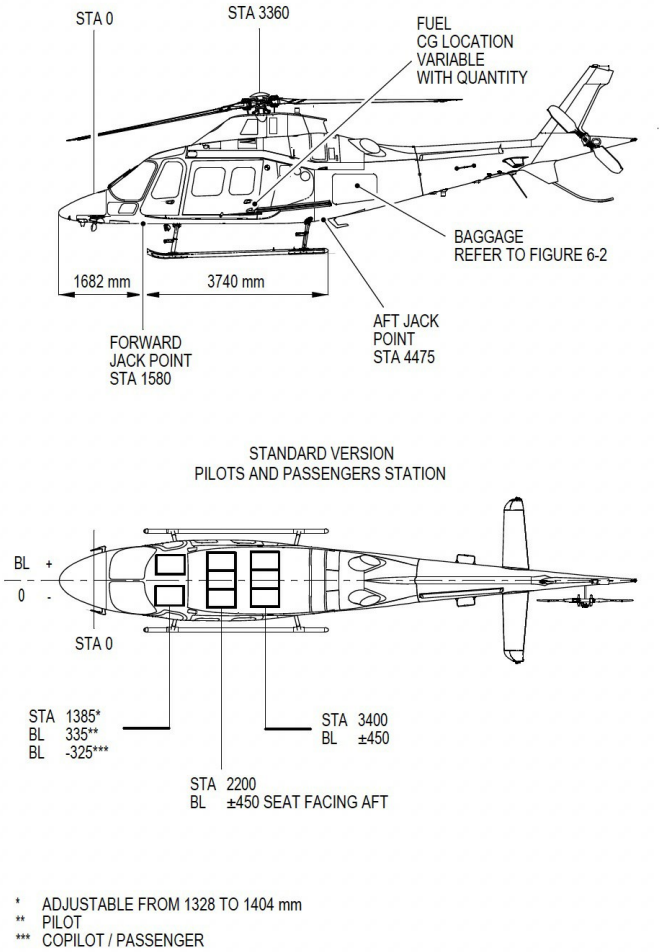

* ADJUSTABLE FROM 1328 TO 1404 mm
** PILOT
*** COPILOT / PASSENGER

ALLOWABLE BAGGAGE LOAD

The baggage compartment is divided in five zones. In Figure 6-2, the maximum baggage load for each zone is presented. The maximum allowable baggage load is **120 kg**.

Figure 6-2 Baggage Loading Zones

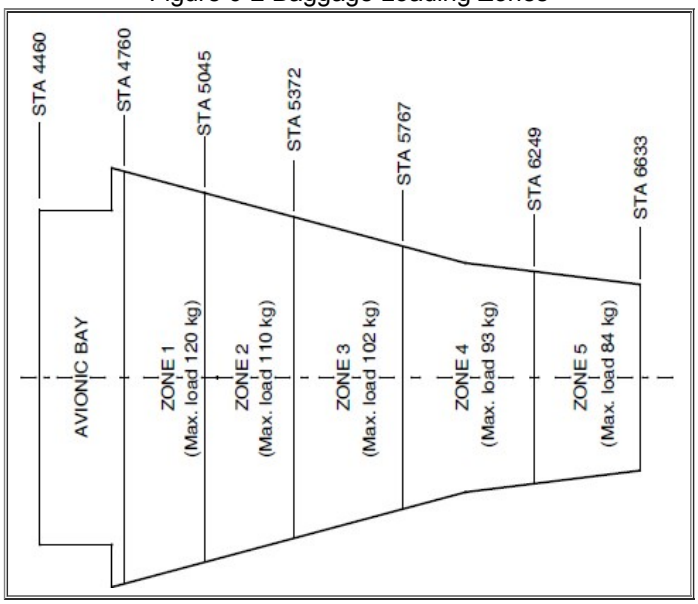

(06.09.02)- Information and Instructions for Completion of Mass and Balance Documentation, including Manual and Computer generated types

Revizyon No: 3 Revizyon Tarihi: 18.09.2018

CAT.POL.MAB.100

WEIGHT AND BALANCE DETERMINATION

Instructions for weight and balance determination are herewith enclosed with instructions for use of charts to enable the operator to obtain all necessary data as to basic helicopter configuration, empty weight and center of gravity. These charts will also provide for continuous control of weight and balance of the helicopter.

This system of weight and balance computation requires the use of charts and forms. They are identified as follows:

Chart A - Equipment List.
Chart B - Helicopter Weighing Record.
Chart C - Basic Weight and Balance Record.
Chart D - Data for Helicopter Weight and Balance Computation
Chart E - Weight and Balance Computation

WEIGHT AND BALANCE DATA RESPONSIBILITY

The Manufacturer inserts all helicopter identifying data on the various charts. This record constitutes the basic weight and balance data of the helicopter, to which the Rotorcraft Flight Manual was assigned, for the condition shown on Chart A. The operator shall keep this data upto-date by recording all changes made to the configuration of the helicopter.

USE OF CHARTS AND FORMS

USE OF CHART A

The Chart A gives the weight, arm and moment of all the standard and optional equipment. The Manufacturer places check marks in the "Basic Configuration" column to identify the items of equipment in the helicopter for the weighing condition. A check (V) in the columns headed "In Helicopter" indicates the presence of the item in the helicopter, and a zero (0) indicates its absence. The next columns of chart A will permit inspection of the helicopter for equipment actually installed. When making an inventory, note whether any items of equipment have been installed or removed and if so enter corresponding weight and moment change on Chart C.

Subsequent check list inventories shall be carried out in the following cases:

1. When the helicopter undergoes modification, major repair or overhaul.
2. When changes in equipment are made for a different type of operation.
3. When the helicopter is reweighed.

For all pages of Chart A:
— √ Means installed on the helicopter
— ○ Means not installed on the helicopter

Page 1 of 1

CHART A - EQUIPMENT LIST
Report 109G0840WXXX

RECORD OF CHECKING (Date and Signature)

MODEL: AW109SP | REGISTRATION MARKS | S/N

ITEM NUMBER	POWER PLANT SYSTEM		Q.ty	WEIGHT (kg)	ARM (mm)	MOMENT (kg mm)	Basic configuration	In helicopter	Chart C entry	In helicopter	Chart C entry	In helicopter	Chart C entry
	P/N	DENOMINATION											

WEIGHING INSTRUCTIONS
Refer to Chapter 08 of the helicopter maintenance publication.

USE OF CHART B
1. Enter the actual scale readings in the first column of Sheet 1. Subtract tare, if any, from the scale readings to obtain the net weight.
2. Multiply the net weights by their respective arms.
3. Add the net weight and moments.
4. Divide the total moment by the net weight to obtain "as weighed" CG position. Transfer the "TOTAL" (as weighed) weight arm and moment to the Sheet 2.
5. Subtract the weight and moment of oil (if reservoir is full) from the "as weighed" total.
6. Subtract the total weight and moment of equipment weighed but not part of the basic helicopter (list these items in column one).
7. Add the weight and moment of unusable fuel.
8. Add the total weight and moment of the basic items not in helicopter when weighed (list these in column two). Added items shall be marked on Chart A.
9. Enter the new basic weight and moment on Chart C.

CHART B - HELICOPTER WEIGHING RECORD			Sheet 1 of 2
MODEL:	S/N:	REGISTRATION MARKS:	
DATE:	PLACE:	SIGNATURE:	
Reason for weighing:			
Scale type:			

JACKPOINTS	SCALE READING	TARE	NET WEIGHT	STA (1)	LONGITUDINAL MOMENT	BL (2)	LATERAL MOMENT
	(kg)	(kg)	(kg)	(mm)	(kg mm)	(mm)	(kg mm)
FORWARD				1635		0	
LH AFTERWARD				4475		-450	
RH AFTERWARD				4475		450	
TOTAL (as weighed) (to Sheet 2 of 2)							

Note 1
The forward lower central cabin is provided by two forward jack points, only one forward jack point is assured by using a proper tool which collect both jacking points.
The Station Reference Datum (STA 0) is located 1635 mm forward the forward jack points. Therefore the STA are positive.
E = Distance from the reference datum (STA 0) to the forward jack point Station of 1635 mm.
F = Distance from the reference datum (STA 0) to the left and right aft jackpoints Station of 4475 mm.

Note 2
The Butt Line Reference Datum (BL 0) is located on the fuselage center line.
Therefore the BL are negative on the left side and positive on the right side.

ICN-06-A-156000-G-00001-00703-A-01-1

CHART B - HELICOPTER WEIGHING RECORD					Sheet 2 of 2
DESCRIPTION	NET WEIGHT (kg)	STA (mm)	LONG. MOMENT (kg mm)	BL (mm)	LAT. MOMENT (kg mm)
TOTAL (as weighed) (from Sheet 1 of 2)					
SUBTRACT (from Table 1)					
ADD (from Table 2)					
BASIC AIRCRAFT (to Chart C)					

TABLE 1 ITEMS WEIGHED BUT NOT PART OF BASIC WEIGHT

DENOMINATION	WEIGHT (kg)	STA (mm)	LONG. MOMENT (kg mm)	BL (mm)	LAT. MOMENT (kg mm)
TOTAL					

TABLE 2 BASIC ITEMS NOT INSTALLED WHEN WEIGHED

DENOMINATION	WEIGHT (kg)	STA (mm)	LONG. MOMENT (kg mm)	BL (mm)	LAT. MOMENT (kg mm)
TOTAL					

Reasons of the weighing:	Type Scales:

NOTE :
Remove the weight of the mission equipment items, which are pointed out in Chart A in [ ]

USE OF CHART C

Chart C is a continuous history of the basic weight and moment resulting from modifications and equipment is considered the current weight and balance status of the basic helicopter. Make additions or subtractions to the basic weight and moment in Chart C as follows:

1. When the helicopter undergoes modification, major repair or overhaul.
2. When changes in equipment are made for a different type of operation.
3. When the helicopter is reweighed.

Note

If any equipment is not listed on Chart A, determine its weight and arm, and list corresponding data on Charts A and C.

CHART C BASIC WEIGHT AND BALANCE RECORD				Page N°
MODEL	S/N	REGISTRATION MARKS		

DATE	Item n° see Chart A IN (1)	OUT (2)	DENOMINATION	LOADING CHANGE WGT (3) (kg)	STA CG (mm)	LONG MOMENT (kg mm)	BL CG (mm)	LATERAL MOMENT (kg mm)	BASIC WEIGHT, MOMENT & CG WGT (kg)	LONG MOMENT (kg mm)	STA CG (mm)	LATERAL MOMENT (kg mm)	BL CG (mm)	SIGNAT.

Note 1 IN = installed component **Note 2** OUT = removed component
Note 3 Weight of an installed component is positive (+) Weight of a removed component is negative (-)

USE OF CHART D

The Chart D provides information necessary for weight and balance computation.

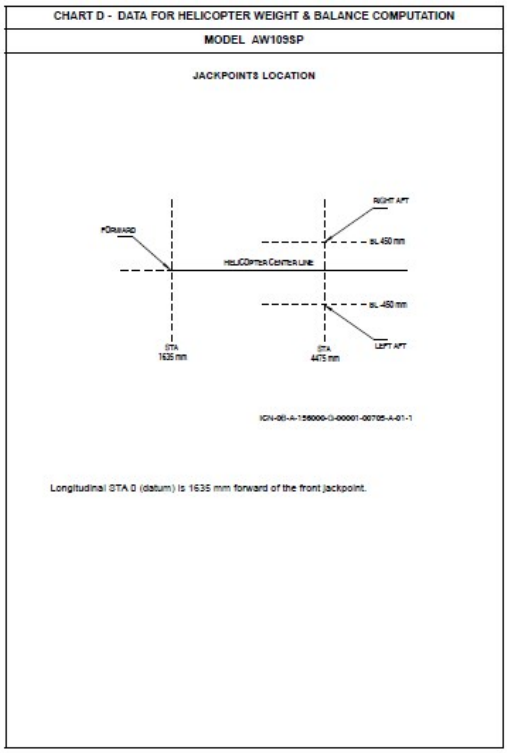

USE OF CHART E

The Chart E serves as a work sheet and records the calculations and any corrections that must be made to ensure that helicopter will be within weight and CG limits.

Note

A Chart E shall be filled prior to any flight.

1. Enter the helicopter basic weight and moment. Obtain these figures from the last entry on Chart E.
2. Enter the weight of all applicable items in the marked "Weight". Obtain the corresponding arms from Chart D and calculate the moments.
3. Add weight and moments. Divide total moment by total weight to obtain CG arm.
4. Ascertain that CG is within allowable limits.
5. Should corrections be required, readjust ballast to return CG within allowable limits.

CHART E - WEIGHT & BALANCE COMPUTATION FORM						
MODEL	S/N	REGISTRATION MARKS		DATE	PLACE	COMPUTED BY
REF.	ITEM	WEIGHT	STA	LONG. MOMENT	BL	LATL. MOMENT
		(kg)	(mm)	(kg mm)	(mm)	(kg mm)
1	HELICOPTER BASIC (Ref. To Chart C)					
2	PILOT					
3	COPILOT					
4	PASSENGER					
5	PASSENGER					
6	PASSENGER					
7	PASSENGER					
8	PASSENGER					
9	PASSENGER					
10	LOOSE EQUIPMENT					
11	CABIN LOAD					
12	BAGGAGE COMPARTMENT LOAD					
14						
15						
16						
17						
18						
19						
20						
21	DRY WEIGHT					
22	FUEL (at take-off)					
23	GROSS WEIGHT (at take-off)					
24	FUEL (at landing)					
25	GROSS WEIGHT (at landing)					
26	BALLAST (if required)					
LIMITATIONS Refer to Section 1 of this RFM		REMARKS				

(06.09.03)- Limiting masses and centre of gravity for the types, variants or individual aircraft

Revizyon No: 3 Revizyon Tarihi: 18.09.2018

CAT.POL.MAB.100

Refer to OM B section 01.01.05 Mass and Centre of Gravity (CG) with the pictorial graphics.

(06.09.04)- Dry Operating Mass and corresponding Centre of Gravity (CG) or Index

Revizyon No: 8 Revizyon Tarihi: 04.07.2026

CAT.POL.MAB.100

- AW109SP :

MODEL	S/N	REG.MARK	DATE	PLACE		
AW109SP	22278	TC-HKG	07.02.2024	KAAN		
	ITEM	Weight (Kg)	STA (mm)	LONG Mom. (Kg mm)	BL (mm)	LAT Mom. (kg mm)
	EMPTY WEIGHT	2288,5	3.477	7.957.297,5	7,47	17.100

- A109S Trekker :

MODEL	S/N	REG.MARK	DATE	PLACE		
A109S Trekker	22705	TC-HKH	22.06.2026	KAAN		
	ITEM	Weight (Kg)	STA (mm)	LONG Mom. (Kg mm)	BL (mm)	LAT Mom. (kg mm)
	EMPTY WEIGHT	1995,01	3.558,8	7.099.832,37	9	19.800

(06.09.05)- Sample Mass and Balance Sheet

Revizyon No: 8 Revizyon Tarihi: 04.07.2026

CAT.POL.MAB.100

TC-HKG A-109 SP WEIGHT AND BALANCE COMPUTATION FORM

KAAN HAVACILIK SANAYİ VE TİCARET A.Ş.

	Copilot (Kg)		Pilot (Kg)	
	85		85	
	1		2	
Row 1				Passenger Seats (Kg)
Row 2	78		96	

Baggage	6	(Kg)
Flight Time	60	(Minutes)
Take Off Fuel	420	(Kg)
Landing Fuel	220	(Kg)
Take Off Weight	3068,5	(Kg)

	Fuel Calculation For Flight	
	Flight Fuel	Total Fuel
Kg.	200	633,6
Liters	250	792
US Gallons	67	211
Pounds (lbs.)	441	1397

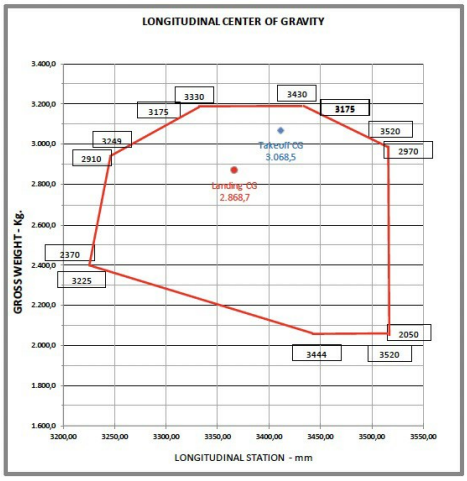

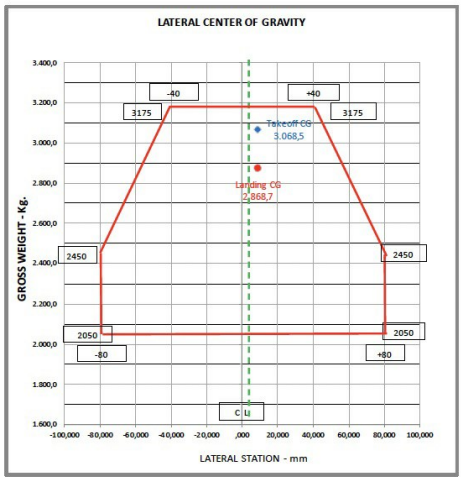

WEIGHT AND BALANCE COMPUTATION FORM

MODEL	S/N	REG.MARK	DATE	PLACE	COMPUTED BY	
AW-109 SP	22278	TC-HKG		KAAN		
Ref.	**ITEM**	**Weight (Kg)**	**STA (mm)**	**Long Mom. (Kgmm)**	**BL mm**	**Lat Mom. (Kgmm)**
1	HELICOPTER EMPTY	2.288,5	3477	7.957.297,5	7,47	17.100
2	PILOT	85	1385,00	117.725,00	335,00	28.475,00
3	COPILOT	85	1385,00	117.725,00	-325,00	-27.625,00
4		0	0,00	0,00	0,00	0,00
5	Engine Oil	10,0	4280,00	42.800,00	0,00	0,00
6		0	0,00	0,00	0,00	0,00
7	FWD LH passenger	0	2200,00	0,00	-450,00	0,00
8	FWD central passenger	0	2200,00	0,00	0,00	0,00
9	FWD RH passenger	0	2200,00	0,00	450,00	0,00
10	AFT LH passenger	78	3400,00	265.200,00	-450,00	-35.100,00
11	AFT CENTER passenger	0	3400,00	0,00	0,00	0,00
12	AFT RH passenger	96	3400,00	326.400,00	450,00	43.200,00
13	Baggage	6	5045,00	30.270,00	0,00	0,00
14	DRY Weight (Zero Fuel)	2648,5	3344,31	8.857.417,50	9,84	26.050,00
15	Fuel (Take off)	420,0	3834,00	1.610.280,00	0,00	0,00
16	TOTAL WEIGHT (T/O)	3.068,5	3411,34	10.467.697,50	8,49	26.050,00
17	DRY Weight (Zero Fuel)	2.648,5	3344,31	8.857.417,50	9,84	26.050,00
18	Fuel (landing)	220,2	3638,23	801.138,25	0,00	0,00
19	LANDING WEIGHT	2.868,7	3366,88	9.658.555,75	9,08	26.050,00

ROUTES	
AYAZAĞA	ÇIRAĞAN
Passenger (6 - 9)	
Crew	: 85 Kg.
Male	: 96 Kg.
Female	: 78 Kg.
Children (2-12)	: 35 Kg.
Hand Luggage	: 6 Kg.
Max. Fuel	: 633,6 Kg.
Fuel Flow	: 200 Kg/h
Fuel Flow	: 3,33 Kg/min.

FOF-06 / Rev-3 / 17.02.2024

Signature

)

TC-HKH A109 S Trekker WEIGHT AND BALANCE COMPUTATION FORM

KAAN HAVACILIK SANAYİ VE TİCARET A.Ş.

	Copilot (Kg)		Pilot (Kg)	
	85		85	
	1		2	
Row 1				Passenger Seats (Kg)
Row 2	96		96	

Baggage	6	(Kg)
Flight Time	130	(Minutes)
Take Off Fuel	466	(Kg)
Landing Fuel	76	(Kg)
Take Off Weight	2839,0	(Kg)

	Fuel Calculation For Flight	
	Flight Fuel	Total Fuel
Kg.	390	466,0
Liters	488	583
US Gallons	130	155
Pounds (lbs.)	860	1028

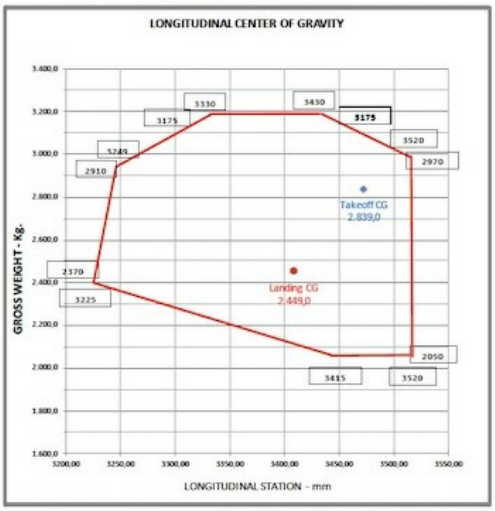

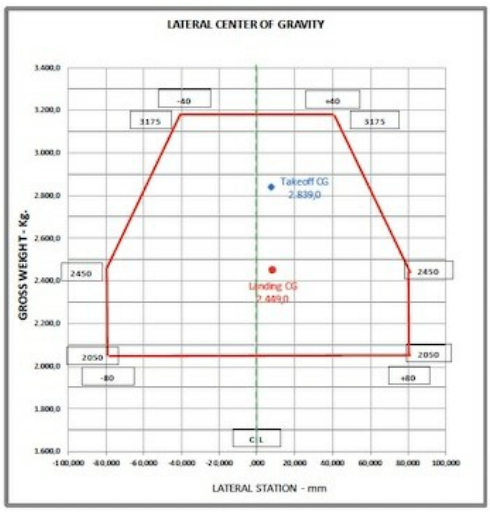

WEIGHT AND BALANCE COMPUTATION FORM

MODEL		S/N	REG.MARK	DATE	PLACE	COMPUTED BY	
A109S Trekker		22705	TC-HKH	22.06.2026	KAAN	KAAN	
Ref.	**ITEM**		**Weight (Kg)**	**STA (mm)**	**Long Mom. (Kgmm)**	**BL mm**	**Lat Mom. (Kgmm)**
1	HELICOPTER EMPTY		1.995,01	3558,8	7.099.832,4	9,00	19.800
2	PILOT		85	1385,00	117.725,00	335,00	28.475,00
3	COPILOT		85	1385,00	117.725,00	-325,00	-27.625,00
4			0	0,00	0,00	0,00	0,00
5	Engine Oil		10,0	4280,00	42.800,00	0,00	0,00
6			0	0,00	0,00	0,00	0,00
7	FWD LH passenger		0	2200,00	0,00	-450,00	0,00
8	FWD central passenger		0	2200,00	0,00	0,00	0,00
9	FWD RH passenger		0	2200,00	0,00	450,00	0,00
10	AFT LH passenger		96	3400,00	326.400,00	-450,00	-43.200,00
11	AFT CENTER passenger		0	3400,00	0,00	0,00	0,00
12	AFT RH passenger		96	3400,00	326.400,00	450,00	43.200,00
13	Baggage		6	5045,00	30.270,00	0,00	0,00
14	DRY Weight (Zero Fuel)		2373,0	3397,02	8.061.152,37	8,70	20.650,00
15	Fuel (Take off)		466,0	3856,70	1.797.222,20	0,00	0,00
16	**TOTAL WEIGHT (T/O)**		**2.839,0**	**3472,47**	**9.858.374,57**	**7,27**	20.650,00
17	DRY Weight (Zero Fuel)		2.373,0	3397,02	8.061.152,37	8,70	20.650,00
18	Fuel (landing)		76,0	3777,40	287.082,40	0,00	0,00
19	**LANDING WEIGHT**		**2.449,0**	**3408,82**	**8.348.234,77**	**8,43**	20.650,00

ROUTES	
AYAZAĞA	ÇIRAĞAN
Passenger (6 - 9)	
Crew	: 85 Kg.
Male	: 96 Kg.
Female	: 78 Kg.
Children (2-12)	: 35 Kg.
Hand Luggage	: 6 Kg.
Max. Fuel	: 466 Kg.
Fuel Flow	: 180 Kg/h
Fuel Flow	: 3 Kg/min.

FOF-06 / Rev-3 / 17.02.2024

Signature

TABLE OF CONTENTS

07.01-Helicopter Systems, related controls and indications and operating instructions (consideration should be given to use the ATA number system when allocating chapters and numbers)

07-HELICOPTER SYSTEMS

AMC3 ORO.MLR.100

(07.01)- Helicopter Systems, related controls and indications and operating instructions (consideration should be given to use the ATA number system when allocating chapters and numbers)

Revizyon No: 3 Revizyon Tarihi: 18.09.2018

AMC3 ORO.MLR.100

Rotocraft Flight Manual

The description of the individual helicopter systems is to be found in Appendix B.07.01
Also the other Appendices are:

- Appendix B.AW109.02.01 RFM Normal Procedures
- Appendix B.AW109.03.01 RFM Emergencies
- Appendix B.AW109.06.01 RFM Mass and Balance
- Appendix B.AW109.07.01 RFM System Description
-
- Appendix B.AW109.S.01 Enviromental Control System
- Appendix B.AW109.S.04 Category A Procedures
- Appendix B.AW109.S.20 Digital Map Generator
- Appendix B.AW109.S.21 Traffic Advisory System
- Appendix B.AW109.S.25 Supplementary Fuel Tanks
- Appendix B.AW109.S.27 EVS Video Camera
-
- Appendix B.AW109. Preflight Checklist

TABLE OF CONTENTS

08.01-Loading, Unloading and Securing the LOAD in the aircraft

08.02-Dangerous Goods transport by air

08-LOADING

CAT.POL.MAB.100 / CAT.OP.MPA.160 / AMC2 CAT.OP.MPA.160 / AMC1 CAT.OP.MPA.160

(08.01)- Loading, Unloading and Securing the LOAD in the aircraft

Revizyon No: 3 Revizyon Tarihi: 18.09.2018

CAT.POL.MAB.100 / AMC1 CAT.OP.MPA.160 / AMC2 CAT.OP.MPA.160 / CAT.OP.MPA.160

A manifest must be created for every flight on which persons or cargo are carried. Prior to the flight the Commander must ensure that the passengers are securely seated and that cargo is safely loaded. The Commander may delegate this task to another crew member or ground personnel. The personnel to whom this task is delegated shall confirm to the Commander that passengers /cargo / baggage are securely and properly loaded.

08.01.01 Passenger Transport

Passengers may only be carried when they are properly seated and their shoulder and lap safety belts are fastened. Where needed a crew member or ground handling personnel shall assist passengers. In scheduled commercial air taxi flight :

- Only hand baggage that can be adequately and securely stowed is taken into the passenger compartment,

08.01.02 CARRIAGE OF CARGO IN THE PASSENGER COMPARTMENT

The following should be observed before carrying cargo in the passenger compartment, for helicopters: the mass of cargo should **not exceed the structural loading** limits of the floor or seats; the number/type of restraint devices and their attachment points should be capable of restraining the cargo in accordance with applicable Certification Specifications; and the location of the cargo should be such that, **in the event of an emergency evacuation**, it will **not hinder egress nor impair the crew's view**.

08.01.03 Cargo Transport

All **baggage and cargo** on board that might cause injury or damage, or obstruct aisles and exits if displaced, is **stowed** so as to prevent movement.

08.01.04 STOWAGE PROCEDURES

Hand baggage and cargo are adequately and securely stowed should take account of the following:

- each item carried in a cabin should be stowed only in a location that is capable of restraining it;
- **weight limitations** placarded on or adjacent to stowages should **not be exceeded**;
- under seat stowages should not be used unless the seat is equipped with a restraint bar and the baggage is of such size that it may adequately be restrained by this equipment;
- baggage and cargo placed in lockers should not be of such size that they prevent latched doors from being closed securely;
- baggage and cargo should not be placed where it can impede **access to emergency equipment**; and
- checks should be made before take-off, before landing and whenever the 'fasten seat belts' signs are illuminated or it is otherwise so ordered to ensure that baggage is stowed where it **cannot impede evacuation** from the aircraft or **cause injury by falling** (or other movement), as may be appropriate to the phase of flight.

(08.02)- Dangerous Goods transport by air

Revizyon No: 3 Revizyon Tarihi: 18.09.2018

CAT.POL.MAB.100 / SPA.DG.100

KAAN AIR **has not approved** on the transport dangerous goods with helicopters which approval is taken from the TR DGCA.

TABLE OF CONTENTS

09.01-MEL for each aircraft type or variant operated and the type(s)/area(s) of operation

09-MINIMUM EQUIPMENT LIST (MEL)

ORO.MLR.105

(09.01)- MEL for each aircraft type or variant operated and the type(s)/area(s) of operation

Revizyon No: 3 Revizyon Tarihi: 18.09.2018

ORO.MLR.105 / Regulation (EC) No. 216/2008 Annex IV

The Minimum Equipment List is separately approved by the TR DGCA and kept in the folder MEL of the Flight Operations Department.

Additionally, a digital version is available to all Crew / Staff via the intranet.

TABLE OF CONTENTS

10.01-List of Survival Equipment to be carried for the routes to be flown and the procedures for checking the serviceability of this equipment prior to take-off, Instructions regarding the location, accessibility and use of survival and emergency equipment and its associated checklist(s)

10.02-Items for Communication to the RCC - RESCUE COORDINATION CENTRE, The information, compiled in a list, should include, as applicable, the number, colour and type of life rafts and pyrotechnics, details of emergency medical supplies, e.g. first-aid kits, emergency medical kits, water supplies and the type and frequencies of emergency portable radio equipment

10.03-First Aid Kit

10.04-Emergency Lighting and marking

10.05-Emergency Locator Transmitter (ELT)

10.06-Flight Over Water

10.07-Survival Equipment

10.08-Procedures to ensure that Before Taxiing, Take-off and Landing and when safe and practicable to do so, all means of assistance for Emergency Evacuation that deploy automatically are armed

10-SURVIVAL AND EMERGENCY EQUIPMENT INCLUDING OXYGEN

CAT.IDE.H.100

(10.01)- List of Survival Equipment to be carried for the routes to be flown and the procedures for checking the serviceability of this equipment prior to take-off, Instructions regarding the location, accessibility and use of survival and emergency equipment and its associated checklist(s)

Revizyon No: 3 Revizyon Tarihi: 18.09.2018

CAT.IDE.H.100

- Life Jackets

(10.02)- Items for Communication to the RCC - RESCUE COORDINATION CENTRE, The information, compiled in a list, should include, as applicable, the number, colour and type of life rafts and pyrotechnics, details of emergency medical supplies, e.g. first-aid kits, emergency medical kits, water supplies and the type and frequencies of emergency portable radio equipment

Revizyon No: 3 Revizyon Tarihi: 18.09.2018

CAT.IDE.H.330

N/A

(10.03)- First Aid Kit

Revizyon No: 3 Revizyon Tarihi: 18.09.2018

CAT.IDE.H.220

(a) KAAN AIR helicopters will be equipped with at least one first-aid kit.

(b) First-aid kits will be:
(1) readily accessible for use;
(2) kept up to date.

To be kept up to date, first-aid kits will be:

(a) inspected periodically to confirm, to the extent possible, that contents are maintained in the condition necessary for their intended use;

(b) replenished **once a year**, in accordance with instructions contained on their labels, or as circumstances warrant; and

(c) replenished after use-in-flight **at the first opportunity** where replacement items are available.

AW109 is equipped with **1 first aid kit**. It is located **under the front passenger seat row**.

(10.04)- Emergency Lighting and marking

Revizyon No: 3 Revizyon Tarihi: 18.09.2018

CAT.IDE.H.275

N/A

(10.05)- Emergency Locator Transmitter (ELT)

Revizyon No: 3 Revizyon Tarihi: 18.09.2018

CAT.IDE.H.280

The emergency locator system consists mainly of an Emergency Locator Transmitter (ELT), an antenna and a switch on the instrument panel. The ELT is installed in the tail boom. The antenna is located on the tail boom.

The ELT automatically activates in the event of a crash and transmits the standard swept tone on 121.5, 243.0 and 406.0 MHz radio frequencies. During transmission an encoded digital message is sent to the satellite. The information contained in the message is:

– The country code
– The identification code
– The manufacturer code
– The operator code.

The ELT continues to operate until the battery discharges, that is during 72 hours at least.
A switch in the cockpit permits the ELT to be tested and reset. It is not possible to turn off the system from the cockpit.
The system is powered through the circuit breaker that follows:
– ELT PRIMARY (28 V dc BATTERY BUS).
The main components of the emergency locator system are shown in Figure 7-43.

EMERGENCY LOCATOR SYSTEM CONTROLS AND DISPLAYS
Refer to Figure 7-44.

Figure 7-43 Emergency Locator System - Components Location

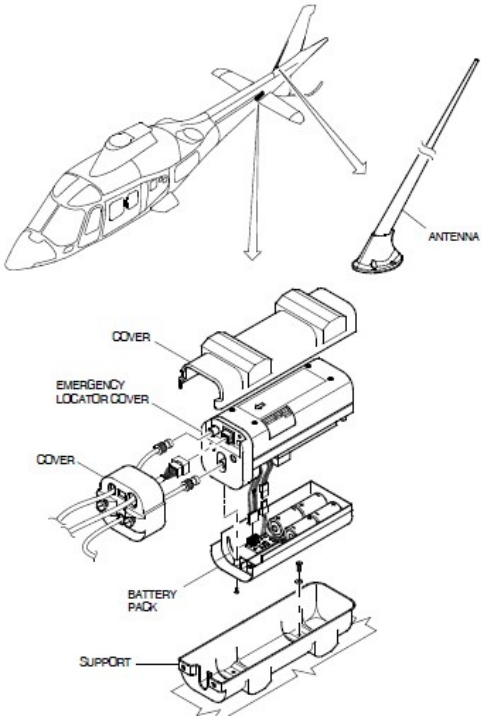

Figure 7-44 Emergency Locator System - Controls and Displays

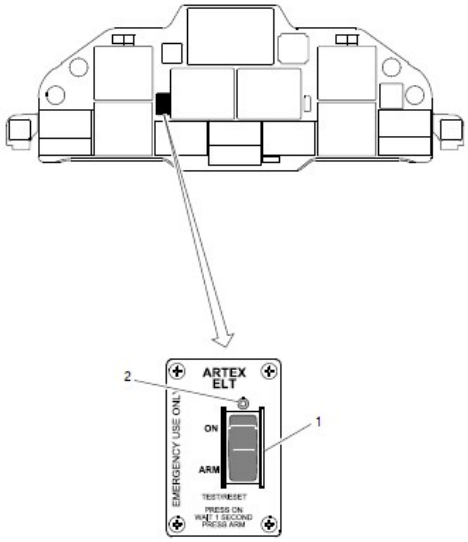

Key to Figure 7-44
Ref. Control/Display Function
1 ELT switch ARM - The ELT is activated to operate in normal
automatic condition. ON position - pressed (for more than 1 second) activates the test/reset of the ELT. The swept tone signal and the flashing light operate.
2 Flashing light Comes on when the ELT switch is held in the ON position.

(10.06)- Flight Over Water

Revizyon No: 3 Revizyon Tarihi: 18.09.2018
CAT.IDE.H.300 / CAT.IDE.H.315 / CAT.IDE.H.320

All Air-Ops regulation requirements about equipment for flight over water and offshore flight are listed below:

CAT.IDE.H.145 Radio altimeters
(a) Helicopters on flight over water shall be equipped with a radio altimeter capable of emitting an audio warning below a pre-set height and a visual warning at a height selectable by the pilot, when operating:

(1) out of sight of the land;
(2) in a visibility of less than 1.500 m;
(3) at night; or
(4) at a distance from land corresponding to more than three minutes at normal cruising speed.

CAT.IDE.H.275 Emergency lighting and marking
(a) Helicopters shall be equipped with emergency exit markings visible in daylight or in the dark when operated:
(1) in performance class 1 or 2 on a flight over water at a distance from land corresponding to more than 10 minutes flying time at normal cruising speed;
(2) in performance class 3 on a flight over water at a distance corresponding to more than three minutes flying time at normal cruising speed.

CAT.IDE.H.290 Life-jackets
(a) Helicopters shall be equipped with a life-jacket for each person on board or equivalent floatation device for each person on board younger than 24 months, stowed in a position that is readily accessible from the seat or berth of the person for whose use it is provided, when operated in:
(1) performance class 1 or 2 on a flight over water at a distance from land corresponding to more than 10 minutes flying time at normal cruising speed;
(2) performance class 3 on a flight over water beyond autorotational distance from land;
(3) performance class 2 or 3 when taking off or landing at an aerodrome or operating site where the take-off or approach path is over water.

(b) Each life-jacket or equivalent individual flotation device shall be equipped with a means of electric illumination for the purpose of facilitating the location of persons.

CAT.IDE.H.295 Crew survival suits
Each crew member shall wear a survival suit when operating in performance class 3 on a flight over water beyond autorotational distance or safe forced landing distance from land, when the weather report or forecasts available to the commander indicate that the sea temperature will be less than plus 10 °C during the flight.

CAT.IDE.H.300 Life-rafts, survival ELTs and survival equipment on extended overwater flights
Helicopters operated:
(a) in performance class 1 or 2 on a flight over water at a distance from land corresponding to more than 10 minutes flying time at normal cruising speed;
(b) in performance class 3 on a flight over water at a distance corresponding to more than three minutes flying time at normal cruising speed, shall be equipped with:
(1) in the case of a helicopter carrying less than 12 persons, at least one life-raft with a rated capacity of not less than the maximum number of persons on board, stowed so as to facilitate its ready use in an emergency;
(2) in the case of a helicopter carrying more than 11 persons, at least two life-rafts, stowed so as to facilitate their ready use in an emergency, sufficient together to accommodate all persons capable of being carried on board and, if one is lost, the remaining life-raft(s) having, the overload capacity sufficient to accommodate all persons on the helicopter;
(3) at least one survival ELT (ELT(S)) for each required life-raft; and
(4) life-saving equipment, including means of sustaining life, as appropriate to the flight to be undertaken.

AMC1 CAT.IDE.H.300(b)(3) & CAT.IDE.H.305(b) flight over water & Survival equipment
SURVIVAL ELT
An ELT(AP) may be used to replace one required ELT(S) provided that it meets the ELT(S) requirements. A wateractivated ELT(S) is not an ELT(AP).

CAT.IDE.H.305 Survival equipment
Helicopters operated over areas in which search and rescue would be especially difficult shall be equipped with:
(a) signalling equipment to make distress signals;
(b) at least one ELT(S); and
(c) additional survival equipment for the route to be flown taking account of the number of persons on board.

AMC1 CAT.IDE.H.305 Survival equipment
ADDITIONAL SURVIVAL EQUIPMENT
(a) The following additional survival equipment should be carried when required:
(1) 500 ml of water for each 4, or fraction of 4, persons on board;
(2) one knife;
(3) first-aid equipment; and
(4) one set of air/ground codes.
(b) If any item of equipment contained in the above list is already carried on board the helicopter in accordance with another requirement, there is no need for this to be duplicated.

CAT.IDE.H.320 All helicopters on flight over water — ditching

(a) Helicopters shall be designed for landing on water or certified for ditching in accordance with the relevant airworthiness code when operated in performance class 1 or 2 on a flight over water in a hostile environment at a distance from land corresponding to more than 10 minutes flying time at normal cruise speed.
(b) Helicopters shall be designed for landing on water or certified for ditching in accordance the relevant airworthiness code or fitted with emergency flotation equipment when operated in:

(1) performance class 1 or 2 on a flight over water in a non-hostile environment at a distance from land corresponding to more than 10 minutes flying time at normal cruise speed;
(2) performance class 2, when taking off or landing over water, except in the case of helicopter emergency medical services (HEMS) operations, where for the purpose of minimising exposure, the landing or take-off at a HEMS operating site located in a congested environment is conducted over water;
(3) performance class 3 on a flight over water beyond safe forced landing distance from land.

AMC1 CAT.IDE.H.320(b) All helicopters on flight over water — ditching
GENERAL
The same considerations of AMC1 SPA.HOFO.165(d) (INSTALLATION OF THE LIFE RAFT) should apply in respect of emergency flotation equipment.

(10.07)- Survival Equipment

Revizyon No: 3 Revizyon Tarihi: 18.09.2018
CAT.IDE.H.305 / CAT.IDE.H.295

- Lifevests (Crew, Passenger)

(10.08)- Procedures to ensure that Before Taxiing, Take-off and Landing and when safe and practicable to do so, all means of assistance for Emergency Evacuation that deploy automatically are armed

Revizyon No: 3 Revizyon Tarihi: 18.09.2018
CAT.IDE.H.300

N/A

TABLE OF CONTENTS

11.01-Instructions for preparation for Emergency Evacuation including Crew Coordination and Emergency Station assignment

11.02-Emergency Evacuation procedures (Duties of all members of the crew for the rapid evacuation and handling of the passengers in the event of a forced landing, ditching or other emergency)

11-EMERGENCY EVACUATION PROCEDURES

AMC3 ORO.MLR.100

(11.01)- Instructions for preparation for Emergency Evacuation including Crew Coordination and Emergency Station assignment

Revizyon No: 3 Revizyon Tarihi: 18.09.2018

AMC3 ORO.MLR.100

Operator Procedure

After landing, the captain gives the order to evacuate the helicopter.

The passengers and the crew leave the helicopter using the assigned emergency exits (if possible). After evacuation, the crew checks if all passengers are present and initiates further steps (mayday call, signals, etc.)

Passengers must be briefed on emergency procedures before each flight. This briefing must include how to use the emergency exits. In the helicopter, each passenger must be able to see where the emergency exits are located and which exit he or she must use in the case of emergency. In case of emergency, the captain must inform the passengers thereof (provided time allows him or her to do so).

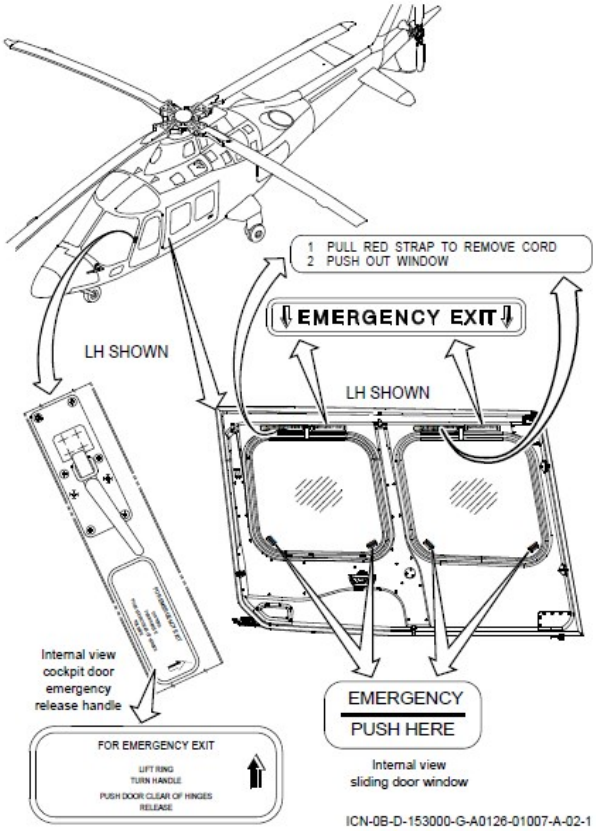

(11.02)- Emergency Evacuation procedures (Duties of all members of the crew for the rapid evacuation and handling of the passengers in the event of a forced landing, ditching or other emergency)

Revizyon No: 3 Revizyon Tarihi: 18.09.2018

AMC3 ORO.MLR.100

After Emergency Action

After a malfunction of equipment has occurred, appropriate emergency actions have been taken and the helicopter is on the ground, an entry must be made in the remarks section of the aircraft log book describing the malfunction. The helicopter shall not be flown until corrective action has been taken.

Emergency Exit

To exit the cabin in the event of an emergency, first attempt to open the doors. If the doors will not open, break the door windows, overhead windows, or windshields as the situation requires.

PRE-FLIGHT CHECK LIST

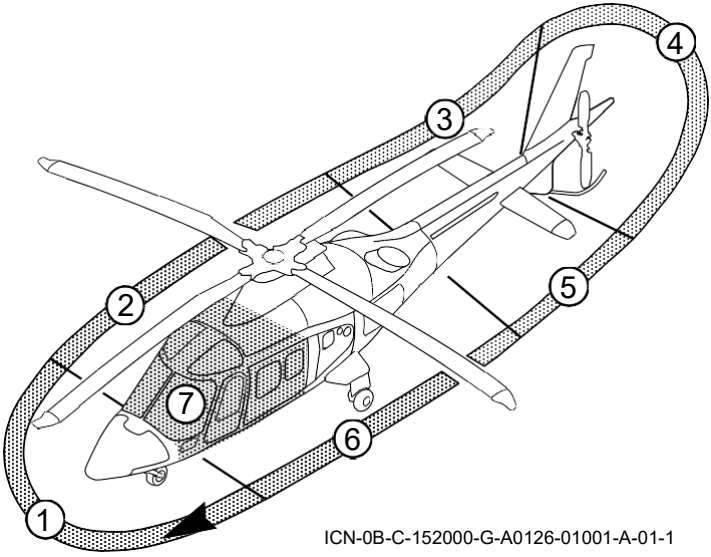

AREA N°1: Helicopter nose
AREA N°2: Fuselage - RH side
AREA N°3: Tail boom - RH side
AREA N°4: Fins, tail gearbox, tail rotor and skid
AREA N°5: Tail boom - LH side
AREA N°6: Fuselage - LH side
AREA N°7: Helicopter interior

Figure 2-1 Pre-flight Check Sequence

The following procedure outlines the pilot walk-around and interior checks (see Figure 2-1)

1. Main and tail rotor tie-downs : Removed.

Area N°1 (Helicopter Nose)

1. Nose exterior : Condition.
2. Ventilation air intake : Free of obstruction.
3. Pitot-static tubes : Cover removed, condition and free of obstruction.
4. Nose landing gear : Condition, shock strut extension, leaks, tyre condition and pressure.
5. Searchlight : Condition and cleanliness.
6. ➡ Nose compartment access door : Open.
7. ➡ Avionics components : Condition and secured.
8. ➡ Accumulators : Condition and free of leaks. (Only one accumulator is present in FIXED WHEELED LANDING GEAR configuration).
9. Nose compartment access door : Secure.
10. ➡ Accumulators : Discharge by pressing two relevant red pushbuttons. (Only one accumulator is present in FIXED WHEELED LANDING GEAR configuration).

CAUTION

The discharge of accumulators causes loss of parking brakes. Suitable measures (wheel chocks) should be taken to ensure helicopter will not move.

11. ➡ Drains and vents : Free of obstruction.

Area N°2 (Fuselage - RH side)

1.	Windshield	: Condition and cleanliness.
2.	Roof, lateral and lower transparent panels	: Condition and cleanliness.
3.	➡ Windshield wiper	: Condition.
4.	➡ RH OAT sensor	: Condition, free of obstruction.
5.	Fuselage exterior	: Condition.
6.	Pilot door window	: Condition, cleanliness, and secure.
7.	➡ Antenna(s)	: Condition.
8.	Emergency floats electrical connector (if installed)	: Cap locked. Chain condition and secure.
9.	Sliding door	: Condition and cleanliness of windows.
10.	➡ Sliding door jettison windows	: Security of windows and seal retainers, condition of emergency markings.
11.	Cowlings and fairings	: Condition and secure.
12.	➡ Fore and middle access doors	: Open.
13.	➡ Servo hydraulic system valves and filter group	: Check for leaks and status (Red button out: filter clogged).
14.	➡ Hydraulic system tanks	: Check fluid level and filler caps for security.
15.	Fore and middle access doors	: Secure.
16.	ENGINE OIL COOLER access door	: Secure.
17.	➡ Service step	: Open and use to reach upper part of helicopter.

18.	➡ Main rotor hub and blades	: Condition and secure.
19.	➡ Main rotor dampers	: Condition and secure. Check for correct charge indication.
20.	➡ Main rotor pitch change links	: Condition and secure.
21.	➡ Swashplate and driving scissors	: Condition and secure.
22.	➡ Upper anti-collision light	: Condition and cleanliness.
23.	➡ HYD. SERVOS access door	: Open.
24.	➡ Servo actuator (actuator with yellow decal)	: Condition and leaks.
25.	➡ Main transmission and accessories (visible area)	: Condition and leaks.
26.	➡ Transmission external oil filter	: By-pass indication (Red button out: filter clogged).
27.	HYD. SERVOS access door	: Secure.
28.	➡ ENGINE OIL COOLER access door	: Open.
29.	➡ Cooler blower air intake	: Free of obstruction.
30.	➡ Cooler system belt	: Condition and secured.
31.	ENGINE OIL COOLER access door	: Secured.
32.	➡ Airframe (A/F) fuel filter	: Condition and leaks.
33.	Service step	: Secure.
34.	Engine air intake screen and chamber	: Covers removed; free of damage and obstruction.
35.	➡ Engine access door	: Open.

36.	➡ Engine compartment drain filters	: Free of obstructions.
37.	➡ Engine area	: Check for fuel and oil leaks.
38.	➡ Engine oil	: Check gauge for oil level.
39.	➡ Engine oil filter impending bypass indicator	: Check for correct indication. (Red pop-up indicator not in sight).
40.	➡ Engine-transmission drive shaft	: Condition.
41.	➡ Engine supports (visible area)	: Condition.
42.	Engine access door	: Condition, secure.
43.	Fuel filler cap	: Secure.
44.	➡ Igniter access door	: Open.
45.	➡ Igniter box	: Condition.
46.	➡ Engine fire extinguisher bottle.	: Condition.
47.	Engine Exhaust Support	: Condition
48.	Igniter access door	: Secured.
49.	Engine fire extinguisher indicator disc	: Confirm in the red position.

Note

If the engine fire extinguisher indicator disc is not in the red position, it means that the relevant bottle has already been discharged and needs to be replaced.

50.	Tail rotor driveshaft support access door	Secure.

51. Engine exhaust : Cover removed, condition and free of fuel.
52. Main landing gear : Condition, shock strut extension, leaks, tyre condition and pressure.
53. ➡ Wheel brake disc : Confirm freedom of movement
54. ➡ L/G locking system pin : Confirm freedom of movement
55. Landing, taxi light and transparent panel : Condition and cleanliness.
56. ➡ Antenna(s) : Condition.
57. ➡ Drain and vents lines : Free of obstruction.
58. External Power door : Secure.
59. Emergency floats electrical connector (if installed) : Cap locked. Chain condition and secure.

Area N°3 (Tailboom - RH side)

1. Tailboom exterior : Condition.
2. ➡ Antenna(s) : Condition.
3. ➡ Lower anti-collision light : Condition and cleanliness.
4. Stabilizer : Condition and secure.
5. Position lights and flood lights (if installed) : Condition and cleanliness.

Area N°4 (Fins, tail gearbox and skid)

1. Tail fin and skid : Condition.
2. Tail navigation light : Condition and cleanliness.
3. ➡ Tail rotor driveshaft door : Open
4. ➡ Tail rotor driveshaft bearing : Condition and secured. Check for grease leaks

5. ➡ Tail rotor driveshaft door : Secure
6. ➡ Tail rotor gearbox access door : Open.
7. ➡ Tail rotor gearbox : Confirm no leaks.
8. ➡ Tail rotor pitch link control lever : Condition.
9. Tail rotor gearbox access door : Secure.
10. Oil filler cap : Secure.

Area N°5 (Tailboom and tail rotor - LH side)

1. Tail rotor gearbox oil level : Check oil level.
2. Tail rotor hub and blades : Condition, cleanliness and freedom of flapping.
3. Tail rotor pitch change mechanism : Condition and secure.
4. Tailboom exterior : Condition.
5. Stabilizer : Condition and secure.
6. Position lights and flood lights (if installed) : Condition and cleanliness.
7. ➡ Antenna(s) : Condition.
8. ➡ Tail rotor driveshaft cover : Open.
9. ➡ Tail rotor driveshaft bearings : Condition and secured.
   Check for grease leaks.
   Check no marks of slippage.
10. Tail rotor driveshaft cover : Secure.
11. ➡ Tail rotor shaft inspection pins Confirm freedom of movement

Area N°6 (Fuselage - LH side)

1. Baggage compartment door : Open.
2. Baggage compartment : Cargo (if on board) properly secured.
3. ➡ Tail rotor hydraulic servo actuator : Check for oil leaks.

Note

The tail rotor hydraulic servo actuator is accessible in the baggage compartment through an inspection door.

4. ➡ Circuit breakers (in baggage compartment) : All in.

Note

The circuit breakers in the baggage compartment are accessible through an inspection door.

5. Baggage compartment door : Secure.
6. ➡ Drains and vents lines : Free of obstruction.
7. Emergency floats electrical connector (if installed) : Cap locked. Chain condition and secure.
8. Main landing gear : Condition, shock strut extension, leaks, tyre condition and pressure.
9. ➡ Wheel brake disc : Confirm freedom of movement
10. ➡ L/G locking system pin : Confirm freedom of movement
11. Landing, taxi light and transparent panel : Condition and cleanliness.
12. Engine exhaust : Cover removed, condition and free of fuel.

13. Engine fire extinguisher indicator disc : Confirm in the red position.

Note

If the engine fire extinguisher indicator disc is not in the red position, it means that the relevant bottle has already been discharged and needs to be replaced.

14. ➡ Tail rotor driveshaft support access door : Open.
15. ➡ Igniter access door : Open.
16. ➡ Igniter box : Condition.
17. ➡ Engine fire extinguisher bottle : Condition.
18. ➡ Tail rotor middle drive shaft bearings : Check condition. Check no marks of slippage.
19. Engine Exhaust Support : Condition
20. Igniter access door : Secured.
21. Tail rotor driveshaft support access door : Secure.
22. Engine air intake screen and chamber : Cover removed; free of damage and obstruction.
23. ➡ Engine access door : Open.
24. ➡ Engine compartment drain filters : Free of obstructions.
25. ➡ Engine area : Check for fuel and oil leaks.
26. ➡ Engine oil : Check gauge for oil level.
27. ➡ Engine oil filter impending bypass indicator : Check for correct indication.

28.	➡ Engine-transmission drive shaft	: Condition.
29.	➡ Engine support (visible area)	: Condition.
30.	Engine access door	: Condition, secure.
31.	➡ ENGINE OIL COOLER access door	: Open.
32.	➡ Cooler blower air intake	: Free of obstruction.
33.	➡ Cooler system belt	: Condition and secured.
34.	ENGINE OIL COOLER access door	: Secure.
35.	Service step	: Open and use to reach upper part of helicopter.
36.	➡ Main rotor hub and blades	: Condition and secure.
37.	➡ Main rotor dampers	: Condition and secure. Check for correct charge indication.
38.	➡ Main rotor pitch change links	: Condition and secure.
39.	➡ Swashplate and driving scissors	: Condition and secure.
40.	➡ Transmission oil access door	: Open.
41.	➡ Transmission oil filler cap	: Secure.

CAUTION

The transmission oil level check is to be performed in any case before the first flight of the day and it can be considered valid for a maximum of 5 flights including the first.

Note

Transmission oil level must be between the MIN and the MAX markings.

42.	➡ Transmission oil	: Confirm correct level.
43.	➡ Transmission oil access door	: Secure.
44.	➡ HYD. SERVOS access door	: Open.
45.	➡ Main transmission and accessories (visible area)	: Condition and leaks.
46.	➡ Servo actuators (visible ones: actuator with red decal and one with blue decal)	: Condition and leaks.
47.	HYD. SERVOS access door	: Secure.
48.	➡ Airframe (A/F) fuel filter	: Condition and leaks.
49.	Service step	: Secure.
50.	Cowling and fairings	: Condition and secure.
51.	➡ Sliding door jettison windows	: Security of windows and seal retainer, condition of emergency markings.
52.	Sliding door	: Condition and cleanliness of windows.
53.	Fuselage exterior	: Condition.

54. Fore and middle access door : Open.
55. Flight control rods : Confirm freedom of movement.
56. Fore and middle access door : Secure.
57. Co-pilot door and window : Condition, cleanliness, seal retainer and secure.
58. ➡ LH OAT sensor : Condition, free of obstruction.
59. Windshield : Condition and cleanliness.
60. Roof, lateral and lower transparent panels : Condition and cleanliness.
61. ➡ Windshield wiper : Condition.
62. ➡ Antenna(s) : Condition.
63. Emergency floats electrical connector (if installed) : Cap locked. Chain condition and secure.

Area N°7 (Helicopter interior)

Cabin interior

1. ➡ Sliding door jettison windows (RH and LH) : Security and condition of seal retainer and red strap.
2. ➡ Sliding doors (RH and LH) : Confirm correct operation of locking and mechanical stop devices.
3. Passenger safety belts : Condition and belts fastened

Note

Operation with passenger sliding doors open or removed requires removal or correct securing of all cabin equipment, installations and trim panels and that passenger safety belts are fastened if seats are unoccupied.

4.	Cabin interior	: Check security of equipment. Confirm presence of markings.
5.	➡ First aid kit	: Check on board and content.
6.	Sliding doors (RH and LH)	: Closed and secure.

Cockpit interior

7.	➡ Co-pilot door jettison handle	: Correct position and secure.
8.	➡ Co-pilot safety belt and inertia reel	: Condition and belt fastened.
9.	➡ Co-pilot seat	: Secure.
10.	➡ Co-pilot flight controls	: Condition and secure.
11.	➡ LH lower and lateral transparent panels	: Condition and cleanliness.
12.	Co-pilot door	: Closed and secure. Sliding windows closed.
13.	➡ Pilot door jettison handle	: Correct position and secure.
14.	➡ Pilot safety belt and inertia reel	: Condition.
15.	➡ Pilot seat	: Secure.
16.	➡ Pilot flight controls	: Condition and secure.
17.	➡ RH lower and lateral transparent panels	: Condition and cleanliness.
18.	➡ Cockpit fire extinguisher	: Charged and secure.
19.	➡ Passive vibration absorber (if installed)	: Check cover secured.
20.	➡ Instruments, panels and circuit breakers	: Condition and legibility.

21. Circuit breakers : All in.
(Main, pilot and co-pilot overhead).

22. ➡ MSTR AVNX switch : As required.

23. ➡ All other switches/controls : Confirm OFF / guarded / normal position when shutdown.

For the following checks connect the d.c. supply.

Note

The following checks may require a large electrical consumption. Beware of possible battery charge depletion if not using external power.

24. ➡ BAT switch : ON.

25. ➡ GEN BUS 1 and 2 switches : ON.

26. ➡ External Power : Connect (if required).
If external power connected, the battery is automatically disconnected. Confirm BATT OFF caution message is displayed.
If battery requires charging select BAT switch to EPU.

Note

Confirm that external power source supplies not less than 28 V.

27. ➡ Check following systems for correct operation:

— Anticollision lights.

— Position lights.

— Taxi lights.

— Landing lights.

28. ➡ LH airframe (A/F) fuel filter : Gently drain while respective fuel pump is operating. Push red button on filter and check for bypass indication and #1 A/F F FLTR caution message on EDU1.

Note

Fuel is pressurised, therefore drainage should be carried out by gently pushing red button. Failure to comply with this advice could result in some fuel being squirted around.

29. ➡ LH fuel pump : Drain by raising guard and setting FUEL DRAIN switch located in baggage compartment to TNK 1 (upper position). Check for fuel dripping from the drain and verify FUEL DRAIN 1 caution message displayed on EDU 1.
Set switch to OFF (centre position).
Verify no fuel dripping and FUEL DRAIN 1 caution message suppressed.

30. ➡ RH fuel pump : Drain by setting FUEL DRAIN switch to TNK 2 (lower position). Check for fuel dripping from the drain and verify FUEL DRAIN 2 caution message displayed on EDU 1.
Set switch to OFF (centre position).
Verify no fuel dripping and FUEL DRAIN 2 caution message suppressed.
Lower guard.

31. ➡ RH airframe (A/F) fuel filter : Gently drain while respective fuel pump is operating. Push red button on filter and check for bypass indication and #2 A/F F FLTR caution message on EDU1.

Note

Fuel is pressurised, therefore drainage should be carried out by gently pushing red button. Failure to comply with this advice could result in some fuel being squirted around.

32. ➡ External Power (if used) : Disconnect.

33. ➡ BAT switch : OFF.

34. ➡ GEN BUS 1 and 2 switches : Check automatically to OFF.

35. Pilot door : Closed and secure.

CHECKLIST
A109S Trekker

ENGINE PRE-START	
PRE-FLIGHT CHECK	Completed
A/C RECORDS	Check On Board
CB s	All IN
DAY / NIGHT	As Required
ECL s	FLIGHT
ECS	OFF
ROTOR BRAKE	OFF / Full Back
ATT HOLD	ON
F-TRIM	ON
FUEL MGT PANEL	All OFF / AUTO
TAWS - TAS / AWG	ON / NORM
RCP PANEL	All NORM
AHRS 1-2	MAG
COLL SWITCHES	OFF
• ENG GOV 1-2	AUTO
Initial Checks	
ALL SWITCHES & CONTROLS	Off / Guarded / Normal Pos
PEDALS / SEATS / BELTS	Adjust / Fastened / Adjust
DOORS / JETTISON	Closed, Locked / Secure
CYC / COLL	Centered / Down
ENG MODE 1-2	OFF
Electrical Power-Up	
MSTR AVNX	GND
BAT EPU	ON
GEN BUS 1-2	ON
GEN 1-2	ON
INV 1-2	ON
COCKPIT LIGHTS	As Required
PFD / MFD	ON / FULL ENGINE
EXTERNAL POWER	Connect If Required, Confirm > 28 V
MWL & MCL	Acknowledge Then RESET
XPDR	Standby or ALT
AWG TEST	Perform
ENG GOV 1-2	TEST Then AUTO
FIRE BTL – S/OFF	Centered, Guarded
FCU & LAMP TEST	Perform, Check QTY change
LD-SH	As Required
STATIC SOURCE	NORM / Guarded
ELT	Confirm ARM
ALTIMETER / BARO	Set
FUEL QTY	Check
VENT	As Required
SERVO	NORM

OEI TNG	OFF / Centered
NR SWITCH	100%
ANTI COLL	ON
ESIS	Confirm ON

ENGINE START	
MFD	FULL ENGINE Format
AREA / ROTOR	CLEAR
Starting Engine 1 (2)	
GEN 1-2	Check ON
FUEL VALVE 1 (2)	OPEN
FUEL PUMP 1 (2)	ON / Check Pressure
ENG MODE 1 (2)	IDLE
N1 / TOT	Check Increase
ROTORS	Turning Before 40% N1
ENG OIL • PRESS / TEMP	Check Rising at 40% N1 / Check
XMSN OIL	Check Rising
ENG STARTER	Check OUT at 50% N1
HYD / ENG / XMSN	Check T&P Within Limits
N2	Confirm IDLE 65% +-1
ENG MODE 1 (2)	FLT (When GEN 2 (1) is Less than 200 A)
N2 / NR	Confirm 100%
After first engine start; repeat the procedure for ENG MODE 2 (1)	
ENG / XMSN	Confirm within Limits
BAT EPU	Confirm ON
EXT PWR (IF USED)	Disconnect
N2 / NR	100%
MSTR AVNX	NORM
CO PILOT PFD	Check ON

XFILL SYNC	PRESS

SYSTEM CHECKS	
HYDRAULIC SYSTEMS	TEST
FUEL SYSTEM XFEED VALVE	TEST AUTO
ELECTRICAL AC SYS	TEST
RCP PANEL	TEST
SAS / HELIPILOT / FD	TEST Then ON
PITOT SYS	TEST

KAAN AIR

CHECKLIST
A109S Trekker

AW109 TREKKER

BEFORE TAKE OFF	
COCKPIT LIGHTS / POS / ANTI COLL	As Required
LDG LIGHTS	As Required
PITOT HEAT	As Required
NR SWITCH	AUTO, and Confirm 102%
TQ LIM	As Required
VNE LIMIT	Set As Required (GW in IDU / DECLUTTER)
CAS LIST	No WARNING / CAUTION
PFD / MFD	SET
BARO	SET QNH / X Check
STBY ATTITUDE (ESIS)	Check / SET
COM / NAV / XPDR	SET / Check / ALT
COMPASS	Cross Check
SAS 1-2	Check ON
POWER ASSURANCE CHECK	As Required
TAKE OFF BRIEFING	Perform

AFTER TAKE OFF	
LANDING LIGHTS	OFF, If Used
N2 / NR (>Vy 75 KIAS)	Confirm 100%
ECS	As Required

CLIMB / CRUISE	
LD-SH	As Required
TQ LIM	OFF Above 40 KIAS
FLT INSTRUMENTS	Check
ENG / XMSN / HYD	Check T&P All NORM
LANDING LIGHTS	OFF, If Used
PITOT HEAT	As Required
COMPASS	Confirm All Sync
RADIO / NAV	As Required
BARO / MSA	QNH / X Check
FUEL QTY	Check

FINAL APPROACH	
APPROACH • BRIEFING	Perform
TQ LIM	Check ON
N2 / NR (<Vy 75 KIAS)	Confirm 102%
LANDING LIGHTS	As Required
SEARCH LIGHT	As Required
BARO	QNH / X Check
NAV INSTRUMENTS	Check
DH / DA	SET
ECS	OFF
CAS LIST	No WARNING / CAUTION

AFTER LANDING	
COLL	Minimum Pitch
LDG LIGHTS	OFF, If Used
NR SWITCH	100%
LIGHTS PANEL	As Required

ENGINE SHUTDOWN	
COLL / CYC / PEDALS	Down / Centered / Trimmed
ENG MODE 1-2	IDLE
ECS	OFF
CABIN / POS LIGHTS	OFF
ENG OIL TEMP	Check Steady
ENG MODE 1-2	OFF
FUEL PUMP 1-2	OFF
FUEL VALVE 1-2	CLOSED When 0% N1
XFEED VALVE	Confirm AUTO
PITOT HEAT 1-2	OFF
ALL SWITCHES	OFF / NORMAL
MSTR AVNX	As Required / GND
INV 1-2	OFF
EXTERNAL LIGHTS	OFF
COCKPIT LIGHTS	OFF
ROTOR BRAKE	Apply Below 40% NR
BATT / GEN 1-2 / GANG BAR	OFF When 0% N1
ANTI COLL	OFF
FLIGHT RECORDS	Collect Data

POST FLIGHT	
PITOT STATIC TUBES	Installed
ENGINE INTAKE / EXHAUST COVERS	Installed